EVO II RTK Series

User Manual

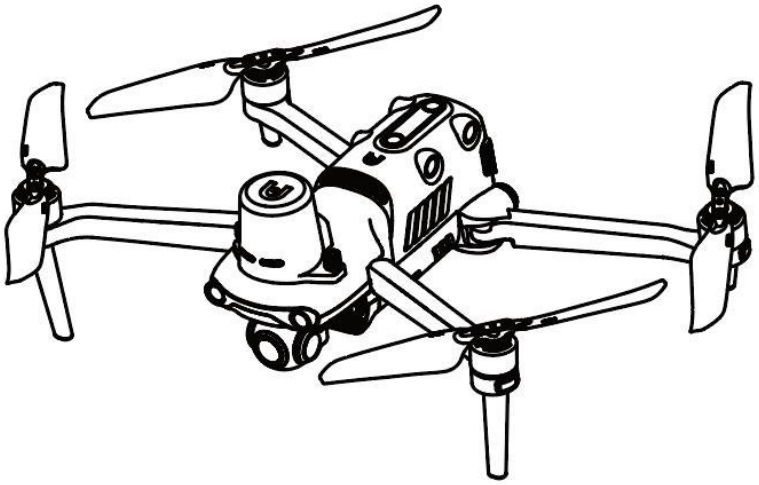

AUTEL
ROBOTICS

Legend keys

Please pay attention to the legend keys in this Manual.

Warning: remind the possible danger

Important: Matters needing attention in flight operation.

Remark: supplementary information

Reminding: Reminding information to get the best operating experience of the EVO Ⅱ RTK series.

References: Page numbers to help you find chapters that contain relevant information in this Manual.

Trademark Information

Trademarks **EVO Ⅱ Dual 640T RTK™, EVO Ⅱ Pro RTK™, Autel Explorer™, Starpoint™** and **Autel Robotics®** are registered trademarks of the Shenzhen Autel Robotics Co., Ltd (hereinafter referred to as "Autel Robotics") in China and other countries/regions. All other products and company name mentioned in this Manual are the registered trademark of their respective owners.

Copyright

Without the explicit consent of Autel Robotics, do not copy or forward any part of the Manual in or by any form (electronic, mechanical, reproducing, recording or other forms).

Patent Information

This product was obtained according to patent procedures. The patent numbers are as follows:
US7979174
IL192490
US9260184
CA2815885
US9979000
US10224526
US10044013
US10115944
US10090496
US10074836
US10341573

US10399699
US10414514

Disclaimer

In order to ensure safety and successfully operate your EVO II RTK aircrafts, please abide by the operating instructions and procedures of this Manual.

Children must use this aircraft under the supervision of an adult. The aircraft shall be kept out of the reach of children when it is not used.
If user fails to abide by the safe operating instructions, Autel Robotics will assume no responsibility for any product damage or loss--direct or indirect, legal, special or economic loss (including but not limited to profit loss) during use, and will not provide warranty service. Never modify your product by using any incompatible component or any method that is not required in Autel Robotics official description.
This Manual will show you the safe operating procedures of aircrafts. Please acknowledge that your operation will not endanger your and other personal and property safety. This Manual will update without a fixed schedule. In order to ensure your use of the latest version, please visit: www.autelrobotics.com/download/163.

Data Storage and Use

The backup service function of this product is disabled by default, so user and flight information will not be uploaded or propagated through mobile device. When Autel Voyager is connected with an aircraft, the flight log including the flight remote sensing data will be uploaded and saved in the Autel Robotics data server. All remote sensing data and flight logs are stored in the data server in the United States, but the data can be uploaded automatically only when the flight log backup option is enabled. Without the explicit authorization of user through Autel Voyager, Autel Robotics customer service team has no right to access to the flight log data. With the authorization, it is only allowed to access to the flight logs within the selected time.
Various still images, motion images and data from the aircraft sensor will be stored in the internal drive of aircraft. If your UAV needs repair, then the information stored in the internal memory unit can be used for problem diagnosis. This information will not be retained, unless for processing service or repair. Never delete or change any data stored in the internal memory unit in any form, otherwise Autel Robotics will not provide warranty. The data collected by Autel Robotics are for providing support and service and improving product performance. We will seriously treat your privacy like ourselves. We can agree to disclose any uploaded data only when the law requires.
For privacy right policy, please visit: www.autelrobotics.com/page/privacy.

Safe operation guide

Battery safety

The EVO II RTK series UAV is powered by lithium-ion polymer batteries. Danger may be caused

by improper use of lithium-polymer/lithium-ion batteries. Please ensure that all the following battery use, charging and storage guidelines are strictly followed.

⚠ **Warning**

- Only the battery and charger provided by Autel Robotics are allowed. Neither modify battery and its charger nor use replace them with the third party equipment.
- The electrolyte in the battery has strong corrosion. If the electrolyte accidentally touches your eye or skin, immediately rinse with clear water and timely see a doctor.

Battery use

When the aircraft battery is installed or removed, be sure to turn off the aircraft power. Other precautions are as follows:

- It is only allowed to use the battery and charger sold or authorized by Autel Robotics for EVO II RTK series. The use of any unapproved battery or charger may cause fire, explosion, leakage or other dangers. Autel Robotics will assume no responsibility for any consequence of using the battery or charger of third party.
- Never decompose, scratch, extrude, bend, pierce, cut, distort or damage the battery in other forms. Otherwise the fire, explosion, leakage or other dangers may be caused.
- Once the battery is found with bulge, smoke, leakage or any damage, it is necessary to stop use or charging immediately and soak the battery into a vessel containing saline water.
- Do not expose the battery to temperatures below -10℃ (14ºF) or above 40℃ (104ºF). Exposing the battery to extreme temperatures will shorten its service life and may cause fire, explosion or other permanent damage.
- Exposing the battery below 5℃ (41ºF) may speed up battery discharge.
- Do not use the battery in a strong electrostatic or electromagnetic environment.
- Do not expose the battery in fire, explosion or other danger.
- If the aircraft falls into water, the battery shall be taken out immediately after it is recovered. Place the battery in an open space and keep a safe distance from flammable objects till that the battery is fully dried. Stop the use of the battery, and contact the customer service center for replacement.

Battery charging

At most 90 minutes are required to fully charge the aircraft battery, but the charging time is related to the remaining battery level.

Other precautions are as follows:

- Never use the damaged battery charger.
- When the charger is not used, disconnect it from the aircraft battery and power supply.
- The charging is allowed only after the battery is cooled to room temperature. If the battery is connected with the charger immediately after flight, the overtemperature protection function may be activated to stop battery charging till that the battery is fully cool.

Battery storage

The battery shall be protected from close contact with water source or heat source when storage. The battery shall be stored in a dry and well-ventilated place in room temperature (ideal temperature of 22°C-28°C (72°F- 82°F)).

Other precautions are as follows:

- The battery shall be kept out of the reach of children and pets.
- Never place the battery in direct sunlight or near sharp object, water, metal or reactive chemical.
- The storage of the battery in extreme temperature will shorten the battery service life. If the battery is not used for 6 day above, it shall be stored in -10°C (14°F)-30°C(86°F). Otherwise, the battery damage or failure may be caused.
- If the battery is not used for long, the battery service life will be shortened.

Battery disposal

- The battery must be thoroughly discharged before it is discarded.
- The battery shall be sent to designated recycling station for proper disposal.

Flight environment

- Please abide by the local laws and regulations on UAV flight. Fly only in the designated aircraft movement area, and use Autel Explorer App to set the satisfactory distance and height limits.
- Do not fly in dangerous situations or severe weather conditions such as tornadoes, rain, hail and snow.
- Do not fly this aircraft near facilities that can generate electromagnetic interference, such as power plants, transmission lines, substations, wind power towers, and radio and television towers.
- Fly in an open and safe area. Stay away from obstacles that may interfere with GPS signals, such as buildings and trees.
- Be extremely careful when flying in an environment above sea level 6000 m (18,000 ft), at which the performance of the battery and power system of the aircraft may be affected.

Pre-flight

Before the UAV flies, it is always necessary to pay attention to the following matters:

- The remote controller, flight battery and mobile device with Autel Explorer App should be fully charged.
- The propellers are correctly installed without damage.
- Front and rear arms of the aircraft are completely extended.
- The motor, gimbal and camera can work normally after the aircraft is powered on.
- All warnings and errors displayed on App have been handled.
- Only accessories provided with this aircraft or sold or authorized by Autel Robotics can be used with this aircraft. Using unapproved accessories can bring serious safety risks and will invalidate the product warranty.

In-flight

- The aircraft shall keep away from people, vehicle and other moving object when taking off and landing.
- Do not let the aircraft out of your sight.
- Do not fly near water.
- Do not cancel the auto return process in the event of low battery alarm. Otherwise the aircraft may return to the return point due to insufficient power.
- When Autel Explorer App displays an alarm, immediately carry out operation according to relevant specification.
- Ensure that you are free of drunkenness, high blood pressure, dizziness, fatigue or any other physical condition that may affect the safe operation of the aircraft.

Warning

- If any part of the aircraft or the remote controller fails to work normally or is visibly damaged, please do not fly any longer and contact the Autel Robotics customer service team: www.autelrobotics.com/page/contact

Storage and maintenance

Carefully check each part of the aircraft after any collision or extrusion. Store the aircraft and its accessories out of the reach of children and pets.

- Store the aircraft and its accessories in a cool and dry place.
- Keep the aircraft away from water source and heat source.
- The recommended temperature of the aircraft shall be 22℃-28℃ (72ºF-82ºF).

The Autel Robotics customer service team is always ready to provide assistance via chat, mobile phone or email (support@autelrobotics.com).

Catalog

Chapter 1 About the Manua..... 9
1.1 Instructions for the first flight..... 9
1.1.1 Documents of start guide..... 9
1.1.2 Autel Explorer App installation..... 9

Chapter 2 Be familiar with your smart UAV..... 10
2.1 Aircraft.....10
2.1.1 Function description.....10
2.1.2 Flight indicator..... 13
2.1.3 Aircraft battery..... 13
2.1.4 Gimbal and camera..... 16
2.1.5 Built-in intelligent flight control system.....21
2.1.6 Intelligent flight features.....22
2.1.7 Omnidirectional binocular vision system..... 24
2.1.8 RTK module..... 27
2.1.9 Industry application.....28
2.2 Remote controller.....31

Chapter 3 Flight preparation..... 39
3.1 Battery preparation.....39
3.2 Remote controller preparation..... 41
3.2.1 Extend remote controller.....41
3.2.2 Turn on/off remote controller.....42
3.2.3 Remote controller calibration..... 43
3.2.4 Aircraft and remote controller pairing..... 44
3.3 Aircraft preparation..... 45

Chapter 4..... 49
Flight Operation..... 49
4.1 Check list before flight.....49
4.2 Remote controller and flight operation.....49
4.2.1 Motor start and aircraft takeoff..... 50
4.2.2 Manipulator control (American manipulator).....51

Chapter 5 Maintenance and service..... 55
5.2 Solutions to common faults.....56
5.3 Storage and maintenance.....57
5.4 Warranty..... 57
5.5 Customer service.....58
5.5.1 Technical support..... 58
5.5.2 Maintenance service.....59

Chapter 6 Annex.....60
6.1 Authentication information and restricted area.....60
6.1.1 Authentication information.....60
6.1.2 Diagram of restricted area.....61
6.2 Specifications.....63

Chapter 1

About the Manual

Thank you for your purchase of EVO II RTK UAVs and welcome your experience in Autel Robotics products. With this Manual, you can understand the features of EVO II RTK products and learn to operate this aircraft and remote controller optimally. Before first use of EVO II RTK products, please read this Manual and attached documents and get ready this Manual at any moment for reference.

1.1 Instructions for the first flight

1.1.1 Documents of start guide

The following documents provide a start guide for you to use the EVO Ⅱ RTK series UAV for the first time.

1. Product List: a list of all items that shall be included in the packing box. For any missing, please contact the Autel Robotics customer support or your local retailer.
2. User Manual: to instruct you to well learn operating methods of EVO Ⅱ RTK series products.
3. Quick Start Guide: basic knowledge to operate EVO Ⅱ RTK series products.
4. Disclaimer and Safe Operation Guide: instructions to safely operate EVO Ⅱ RTK series products.
5. Quick Start Guide for Batteries: basic knowledge of smart batteries.
Download website: www.autelrobotics.com/download/163

Warning

- Please check the aircraft and other accessories listed on the **Product List** in packing box. Do not modify this aircraft by using any incompatible component or any method that is not required in official description.

1.1.2 Autel Explorer App installation

A Autel Explore App can provide the real-time image transport, senior flight and camera control methods for your mobile device. Search **Autel Explorer** in App Store or Google Play, and then press **INSTALL** (installation).

Chapter 2

Be familiar with your smart UAV.

Start your journey of exploration, discovery and creation from now on.

EVO II RTK series UAVs integrate a novel RTK module to provide real-time centimeter-level positioning data and support PPK post-processing. The aircraft can record satellite raw observation data, camera exposure parameters and other data. The positioning system supports RTK base station and network RTK, and can still work in complex environments to accurately and stably achieve data acquisition, helping industry applications.

The EVO II RTK series are equipped with 12 vision sensors on the body, with advanced functions such as intelligent flight and omnidirectional obstacle avoidance. The App provides users with dozens of intelligent photography modes, as well as flight modes of multiple tasks such as rectangular tasks, polygon tasks, waypoint tasks and oblique photography.

EVO II RTK series is small and light, easy to carry to operate, and can easily achieve a maximum speed of 72 km/h, a flight time of 36 minutes, and an operating distance of 9 km (FCC) in terms of performance. EVO II RTK series gimbal adopts a new generation of control algorithms, with a gimbal angle jitter amount controlled at ±0.005°.

EVO II RTK series are divided into two models: EVO II Pro RTK and EVO II Dual 640T RTK. The EVO II Dual 640T RTK is equipped with a 640×512 thermal imaging camera and an 8K visible light camera, which can take thermal imaging and visible light images at the same time, and support fused display of the two, to provide more detailed images. EVO II Pro RTK is equipped with a 1-inch CMOS blessed 6K resolution ultra-high-definition lens, being easy to achieve professional-level imaging experience.

2.1 Aircraft

2.1.1 Function description

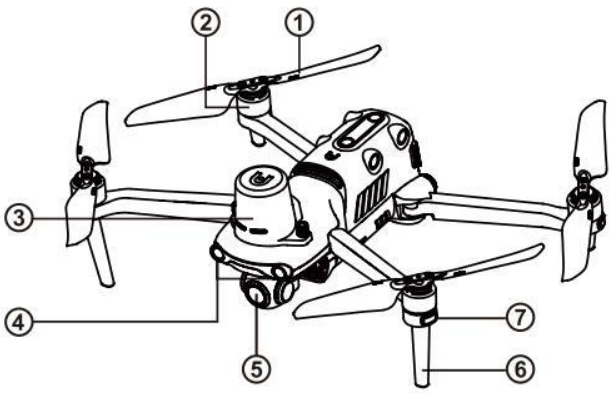

① Propeller
② Motor
③ RTK module
④ Forward vision system
⑤ Gimbal camera
⑥ Undercarriage
⑦ Front LED indicator

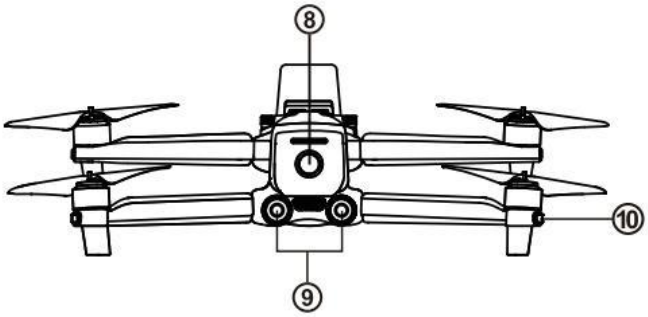

⑧ Power button
⑨ Backward vision system
⑩ Rear LED indicator

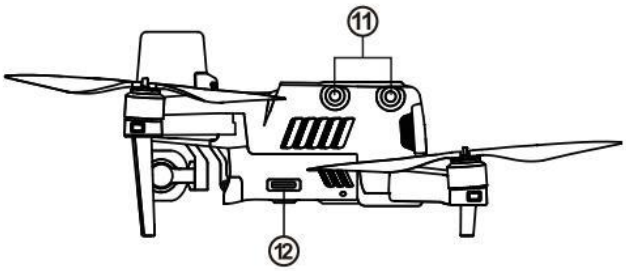

⑪ Left vision system
⑫ SD card slot

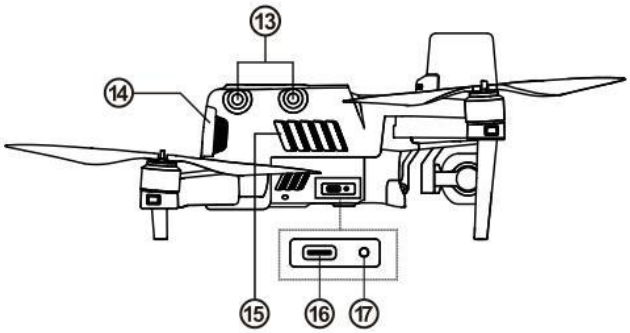

⑬Right vision system
⑭ Aircraft battery
⑮ Fan outlet
⑯ USB-C port
⑰ Remote controller pairing button/pairing indicator

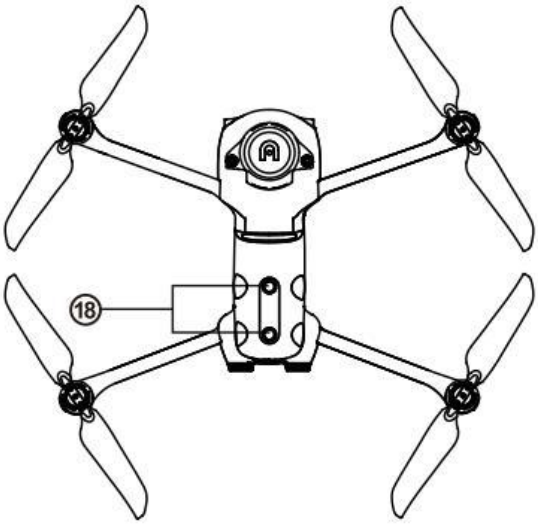

⑱ Upper visual system

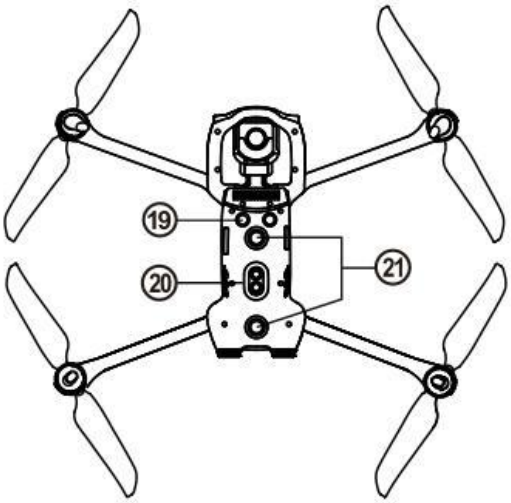

⑲ Ultrasonic sensor
⑳ LED fill-in light
㉑ Lower visual system

Remark:

- The right side is equipped with a protective cover, for protecting the **USB-C port** and **Remote controller pairing button/pairing indicator**. Ensure that the protective cover is kept in the closed state during flight.

2.1.2 Flight indicator

The aircraft has one LED indicator at the end of each arm. The front LED shows steady red to help you to find the head direction. The rear LED shows the current flight status of aircraft. The following table shows the meaning of each status indicator.

Designated symbol of indicator:

Slow flash: flash once every two seconds

Quick flash: flash twice per second

Alternate flash: alternate flash in different colors

Designated symbol of color:

R	Red
G	Green
Y	Yellow

Status definition of flight LED indicator	
Normal status	
RGY - alternate flash	System self-test
YG - alternate flash	Preheat
G - slow flash	Aircraft in GPS mode
Warning	
Y - slow flash	Aircraft in ATTI mode
Y - rapid flash	No connection between aircraft and remote controller
R - slow flash	Low battery warning
R - quick flash	Serious low battery warning
R - Normally on	Serious problem or IMU abnormality
RY - alternate flash	Compass is abnormal, and needs to be calibrated/magnetometer interference
Compass calibration	
Y - rapid flash	Prepare for compass calibration/aircraft under calibration
G - Normally on	Calibration successful
R - Normally red	Calibration failed
Gesture instructions	
R - Quick flash	Receive gesture instructions

2.1.3 Aircraft battery

The rechargeable lithium polymer battery used in the EVO Ⅱ RTK series has the characteristics

of high energy density and large capacity, and shall be charged with the provided special charger.

- **Basic functions**

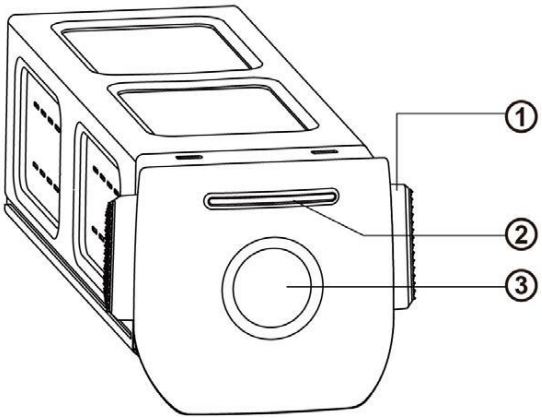

Aircraft battery
① Disconnect button
② Battery level indicator
③ Power button

➢ **Turn on battery**

The battery shall be turned off before it is installed. After installation, long press the **power button** for 3s. The battery level indicator will indicate the current battery level.

➢ **Turn off battery**

Long press the **power button** for 3s to turn off battery. If the battery has been installed on aircraft, LED 1 and LED 4 will flash for five times to remind the shutting down. After all **battery level indicators** are turned off, take the battery out of the aircraft.

➢ **Check battery level**

When the battery is turned off, press the **power button** for 1 second and then release it quickly to check the battery level. LED will indicate the current battery level, as shown below.

Battery level indicator status (non-charging status)			
0%~12%	13%~25%	26%~37%	38%~50%
51%~62%	63%~75%	76%~87%	88%~100%

▮ - Green is normally on ▯ - Green is flashing ▯ - Off

● Additional functions

The following functions can protect and prolong the battery service life.

➢ Self-discharge protection for storage

If the battery is stored in high temperature environment or it is not used for 6 days and the battery level is high, the self-discharge protection will be activated. The battery will automatically discharge to a safe level, this is a default setting, and this discharging process takes 2-3 days. Although the battery has no indication in the self-discharge period, it is normal that the battery may be slightly hot. The discharge threshold can be self-defined with Autel Explorer™ App.

➢ Low battery protection

in the case of low battery level, the battery will automatically enter sleep mode to avoid damage. Under this mode, there will be no reaction when pressing the power button. To wake up the battery, it is allowed to connect it with charger.

➢ Charging temperature detection

the battery will stop charging in the case of charging temperature lower than 5℃ (41ºF) or higher than 45℃ (113ºF).

➢ Overcurrent protection

The battery will stop charging if the charging current exceeds 8A.

➢ Overcharge protection

The battery will automatically stop charging after it is fully charged.

➢ Balanced protection

Each battery unit shall maintain voltage balance to avoid overcharge or overdischarge.

➢ Overdischarge protection

The battery will automatically disconnect the power output function when it is not used and completes the self-discharge period. This function is disabled in flight.

➢ Short-circuit protection

The power supply will be disconnected once the short circuit is detected.

➢ Power-down mode

The battery will turn off if there is no operation within 30 minutes.

➢ Communication

During use, the aircraft will be continuously synchronous with battery to provide the real-time information, including voltage, capacity, current, and temperature.

➢ Low power consumption mode

To save power, this mode will be activated when the battery is idle for 6 days and the voltage is lower than 11.6 V. After connected with the charger, the battery will resume normal functions.

- **LED warning description**

LED 1	LED 2	LED 3	LED 4	Warning description
				The charging temperature is too high or too low.
				The charging current is high enough to cause short circuit.
				There is overcurrent, overload or short circuit problem in the case of discharging.
- Indicator is flashing			- Off	

2.1.4 Gimbal and camera

This aircraft is equipped with a high-precision 3-axis gimbal, which can keep the camera stable while the aircraft is flying, thereby ensuring image stability and clarity. For normal working, the gimbal must be at a temperature of -10℃ to 50℃ (14ºF to 122ºF). You can use the gimbal pitching thumbwheel of remote controller or Autel Explorer App to adjust the gimbal pitch angle within the range of -30 degrees to 90 degrees.

- Gimbal of EVO II Pro RTK: Support 6K camera with 1-inch sensor

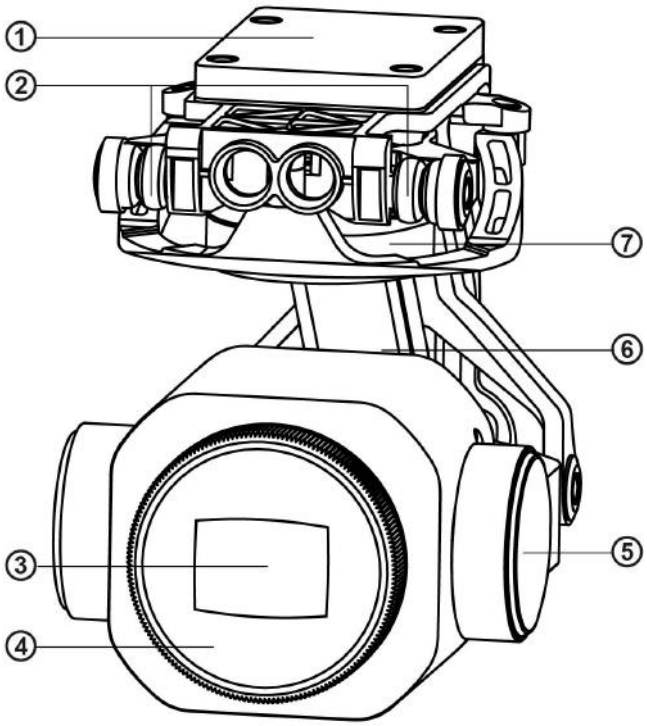

① MCU installation disc
② Shock absorber
③ Camera
④ Filter
⑤ Pitching axis motor
⑥ Rolling axis motor
⑦ Yawing axis motor

- Gimbal of EVO II Dual 640T RTK: Support infrared camera and 8K camera

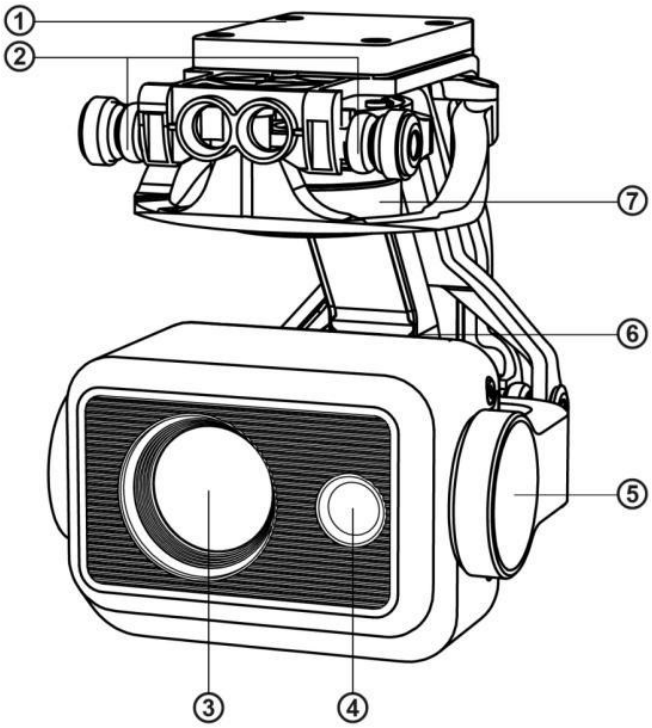

① MCU installation disc
② Shock absorber
③ Infrared ray camera
④ 8K Camera
⑤ Pitching axis motor
⑥ Rolling axis motor
⑦ Yawing axis motor

Important

- EVO II RTK series camera gimbal is fixed by one gimbal protective cover that can protect the gimbal from accidental rotation or damage during storage.
- Please be sure to take down the gimbal protective cover before startup. Otherwise the gimbal camera and circuit may be damaged.
- When turning on the aircraft power switch, the gimbal will rotate automatically to carry out self-test and calibration. Please ensure that there is no object that may hinder the gimbal motion around the gimbal.

The gimbal includes two working modes:

- **Stabilization mode :** The rolling axis remains horizontal while the pitching axis remains the user-defined angle. This mode is used to capture stable image and video.
- **FPV mode:** The rolling axis remains consistent with the rolling direction of the aircraft while the pitching axis remains the user-defined angle. This mode is used for first-person perspective.

Disassembly gimbal

1. The aircraft is placed on a horizontal surface, with the gimbal compartment facing upwards.
2. Unscrew the two screws that fix the gimbal protective cover with a T6 screwdriver, and then remove the gimbal protective cover. Unscrew the screws that fix the FPC connector with a cross screwdriver, and then pull out the connector cable interface from the slot.

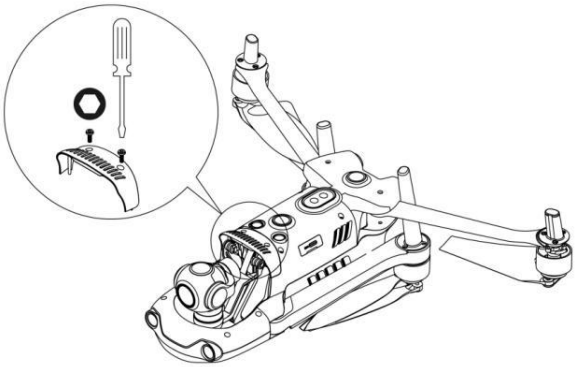

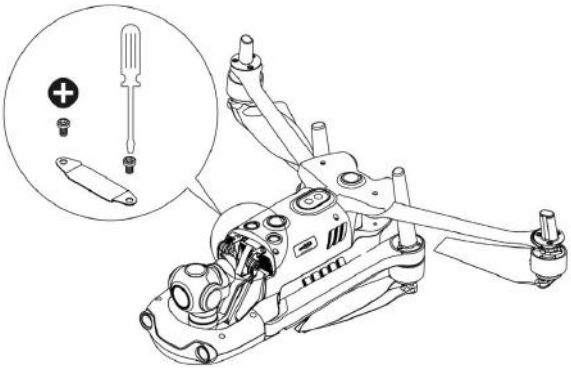

3. Gently pinch the tail of the shock absorber with your thumb and index finger. Slide the gimbal back and up in a straight line along the gimbal compartment slot.

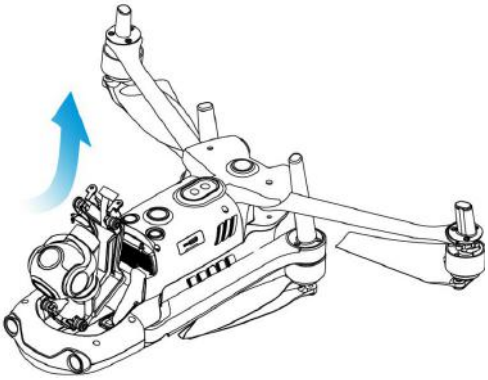

● Gimbal installation

1. Pinch the tail of the shock absorber with your thumb and index finger. Slide the gimbal down and forward in a straight line along the gimbal compartment slot.

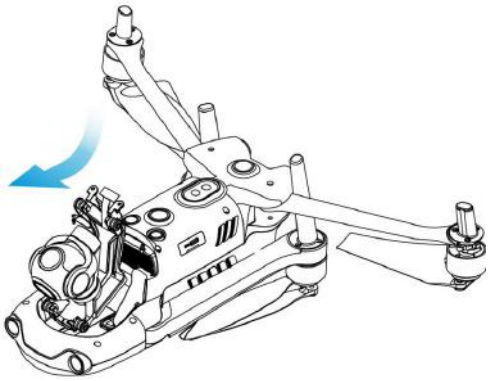

1) Please make sure that the ring at the front end of the gimbal is aligned with the two pins in the gimbal compartment of the machine head.
2) Please make sure that the gimbal is in flush with the slot of the gimbal compartment.

2. Insert the connector cable port into its slot, and gently push it to the end when inserting. Place the gimbal cover on the top of the gimbal compartment, and tighten the cover with a cross screwdriver.

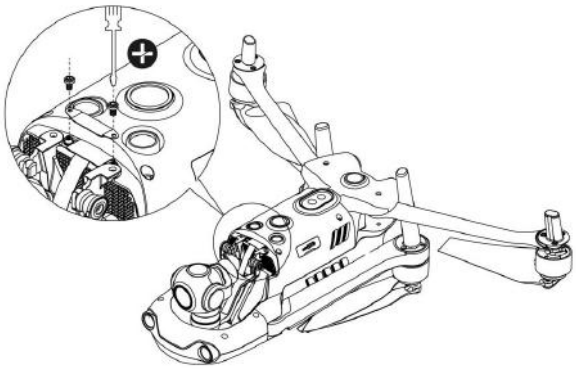

3. Insert a screw into a hole of the gimbal decorating part, and then screw it with a T6 screwdriver until the screw is fixed but not being tightened. Repeat this step for other screws. Fully tighten the two screws with the screwdriver.

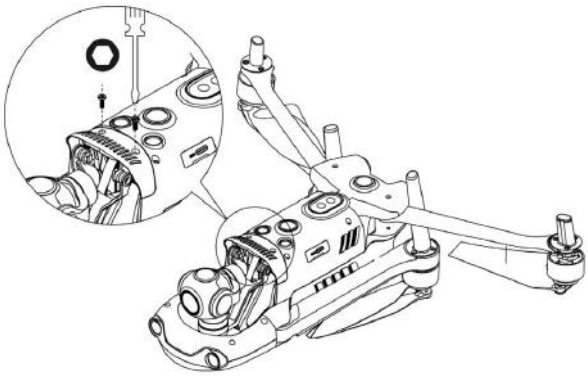

4. Turn on the power switch of the aircraft. If the connector cable of the gimbal is connected correctly, the gimbal will rotate automatically to carry out self inspection.

Remark: Pick up the aircraft and turn it over so that the gimbal faces down. When installed correctly, the gimbal will be remained firmly in its current position.

● Camera

EVO II RTK series can be equipped with two camera modules to use.

- EVO II Dual 640T RTK camera: including 8K visible camera and an infrared camera. The camera can work with visible light and infrared rays and in a dual-image mode. 8K camera can record 7680×4320 resolution video, which is 4 times 4K super-definition images, and Sensor directly takes images of 48m pixels. The resolution of the infrared camera is up to 640 x 512@30fps, and meanwhile, a lens with a focal length of 13 mm is provided, with a 8X zoom function.
- EVO II Pro camera contains one 1 inch sensor: it can take images with a resolution up to 20m (5472 x 3648) and record 5.5K videos of 30 frames, or 2.7K videos of 120 frames, and its code rate is up to 120 Mbps. The camera aperture is adjustable within f/2.8 to f/11.

These two camera modules can support multiple shooting modes, including:

- Single shot
- Continuous shot
- Auto exposure bracketing (AEB)
- Time lapse
- Pure night shooting (in 4K JPEG format)
- Long exposure
- HDR imaging(in 4K JPEG format)

The camera can save photos in DNG or JPG format and record videos in MOV or MP4 format. The image and video can be saved in memory carried by the aircraft or Micro SD card. The high-definition real-time image transmitted from the camera can be displayed in the remote controller screen, or displayed at Autel Explorer™ App at a resolution up to 1080p and a fluency of 30 frames.

➢ Use Micro SD card

Before the aircraft is turned on, first insert one Micro SD card in a port, as shown below.

EVO Ⅱ RTK series can support the SD card with the maximum storage capacity of 256GB. If you want to shoot a high-definition video, you are recommended to use the Class 10 or UHS-3 Micro SD card.

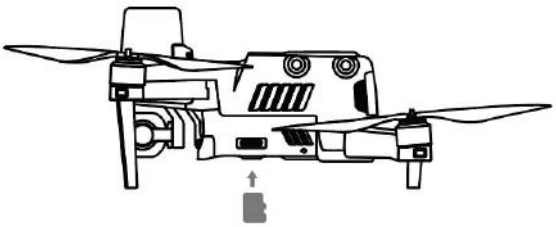

Warning

- To prevent file loss, turn on the aircraft before the Micro SD card is taken out.

➢ **Transfer files to computer**

To transfer images and videos to the computer, please connect the computer to the aircraft via the USB-C port, as shown below.

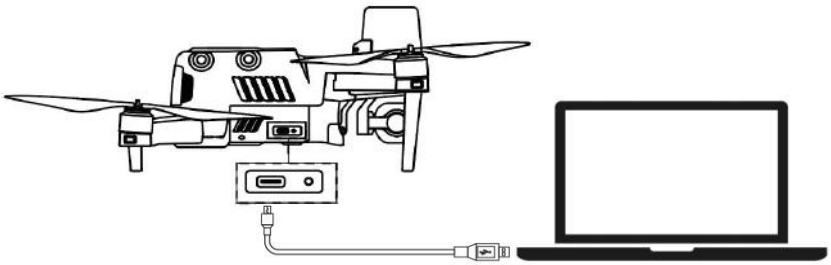

2.1.5 Built-in intelligent flight control system

EVO II RTK series is to conduct stable and convenient flight control by its built-in intelligent flight control system. This system can support multiple advanced functions, including course reversal, fail-safe, Starpoint positioning system, etc. The working description of each module is as shown in the table below.

Intelligent flight control system module	
Module	**Description**
IMU	Use one 3-axis gyroscope and 3-axis accelerometer to measure acceleration and angular speed. When the flight power switch is turned on, carry out the automatic IMU calibration.
Compass	Measure geomagnetic field and provide course reference of aircraft.
GNSS receiver	Receive the GPS/GLONASS signal to determine longitude, latitude and altitude.
Barometer	Measure atmospheric pressure to determine the altitude of aircraft.
Ultrasonic sensor	Measure the distance between aircraft and ground.
Binocular vision system	Support the forward, backward, left, right, upward and downward binocular vision.

- **Flight Mode**

According to GPS availability and flight conditions, EVO Ⅱ RTK series can automatically switch between three flight modes.

Flight Mode	
Flight Mode	**Description**
GPS mode	When the aircraft detects an appropriate GNSS signal, it will activate the GPS mode. With the assistance of the forward and downward vision systems, GPS can locate and avoid obstacles, provide stable and smooth flight control, and support safety functions such as return, fail-safe, etc.
ATTI mode	When the GPS signal is weak and the light conditions cannot meet the vision system, the ATTI mode is activated. The obstacle avoidance function is disabled, and the altitude of the aircraft is controlled only through its barometer.
Starpoint mode	In this mode, the aircraft works in the visual positioning mode, but the environment and height are highly required. The environment must meet the lighting conditions, that is, it must be bright and the ground texture must be clear, and regrading height, the aircraft works in a vision module capability range, and the aircraft enters the ATTI mode over the height.

2.1.6 Intelligent flight features

- **Auto return**

The return function is enabled only when there is good GPS signal. To enable the auto return function manually, long press the return button (Go Home) ( ) on the remote controller for 3s. Upon receipt of the instruction, the aircraft will automatically return and land on the preset return point.

EVO II RTK series can use its forward vision system to detect and avoid the obstacles on the flight course. When the aircraft is in the return state, the function of the remote controller are disabled, you can activate it by pressing the Pause button ( ).

Warning

- If the forward vision system is not enabled during return, the aircraft cannot automatically avoid obstacles, press the pause button ( ) on the remote controller to exit the automatic return function to recover the control on the aircraft.

Important

- The return altitude is 30 m (90 ft) by default. If you activate the return function when the aircraft is below this altitude, the aircraft will rise to 30 m (90 ft) before performing return.
- If the auto return function is activated within a radius of 10 m (30 ft) of the return point, the aircraft will land automatically.

Fail-safe

The fail-safe function is to help EVO Ⅱ RTK series UAVs to return automatically or land at its current position when necessary. The fail-safe will be activated in the following situations:

➢ Communication outage

If the communication between the aircraft and the remote controller interrupts for 3s, the fail-safe function will be activated.

If there is available GPS signal when the fail-safe function is activated, the aircraft will enable the auto return function. Otherwise the aircraft will land on the spot. After communication restoration, you can still press the pause button (⏸) to recover the control on the aircraft.

➢ Low battery of aircraft

In any of the following low battery situations, the fail-safe will be activated.

A. The aircraft will continuously calculate the battery level required to the return point. When the battery level reaches the maximum level required to the return point, Autel Explorer App will show a notification. The fail-safe will be activated to start the return process. Similarly, you can also press the pause button (⏸) to recover the control on the aircraft.

B. When the aircraft battery level reaches the set threshold (25% by default), you will receive one low battery alarm, and the fail-safe will be activated to start the auto return of aircraft. If you recover the control on your aircraft, when the battery level reaches 15%, you will receive one serious low battery alarm, and the aircraft will automatically land on the spot. In emergency, you can press the pause button (⏸) to pause landing, and manually make the aircraft fly to the nearest safe landing point.

Remark:

- When the aircraft battery level reaches 25% (low battery alarm), if the horizontal distance between the aircraft and the return point is less than 50m(150 ft), the aircraft will not carry out the auto return process.
- If there is no available GPS in the case of low battery alarm, the aircraft will not carry out the auto return process. The aircraft will enter the ATTI mode and continue to be controlled. When the battery level reaches 15% (serious low battery alarm), the aircraft will land automatically.

- **Landing features**

➢ **Landing protection**

When the aircraft arrives above the return point, the landing protection function will be activated to detect the ground environment. If the ground is flat, the aircraft will land automatically. Otherwise it will hover on the spot to wait for the next instruction.

➢ **Precise landing**

When the precise landing function is activated, the aircraft will scan and match the topographic features. If the current topography is matched with that at the take-off point, it will land as close to the take-off point.

Important

- The aircraft will record the take-off point as the default return point. The precise landing can take effect only when the return point is not refreshed during flight.
- Select an open and well-lit area (such as grass lawn) as the take-off point.
- When the aircraft is ready for precise landing, it is necessary to ensure that the take-off environment has no change.

Remark

- Landing protection and precise landing can be activated with App.

2.1.7 Omnidirectional binocular vision system

The forward, backward, leftward, rightward, upward and downward vision systems of the EVO Ⅱ RTK series use the image data to calculate the distance between the aircraft and the potential obstacles. Once any obstacle is detected, the system will stop the aircraft.

The forward, backward and downward binocular vision systems also have a Starpoint positioning system. The system uses an ultrasonic sensor to calculate the height of the aircraft, and at the same time the binocular camera obtains position information through image analysis.

Binocular vision system		
System	**Position on aircraft**	**Sensing range of obstacle**
Forward	The front of the aircraft	0.5 - 20 m (1.5 ft - 65 ft)

Backward	The tail of the aircraft	0.5 - 16 m (1.5 ft - 52 ft)
Left/Right	Respectively at the rear parts of the left and right sides of the aircraft	0.5 - 12 m (1.5 ft - 39ft)
Upward	The upper part of the aircraft	0.5 - 12 m (1.5 ft - 39ft)
Downward	The lower part of the aircraft	0.5 - 11 m(1.5 ft - 36 ft)

The figure below shows the covering angle of each binocular vision system:

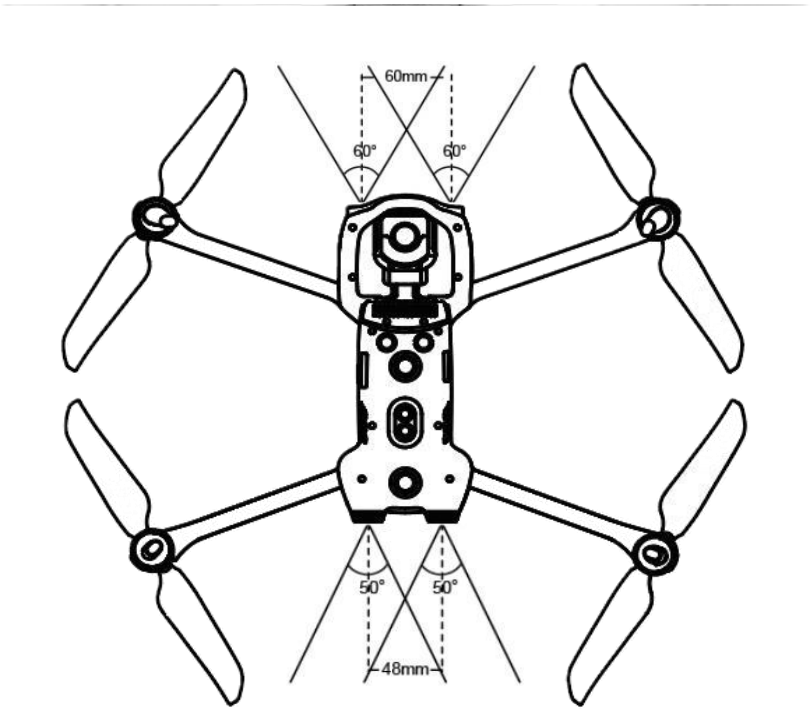

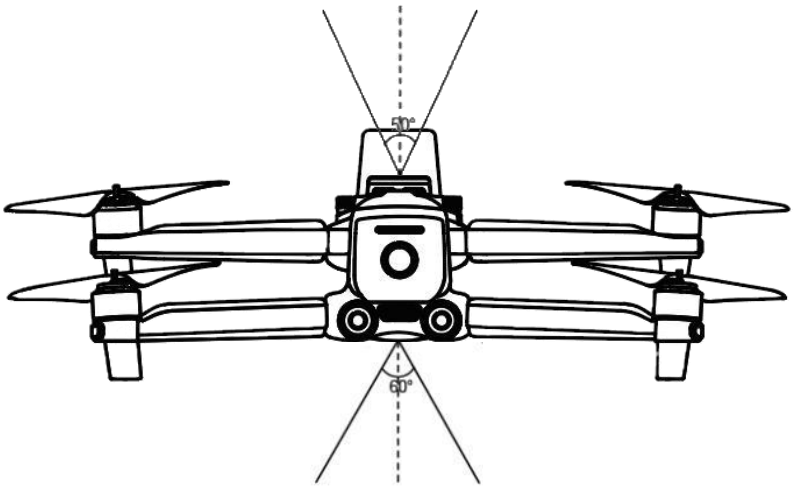

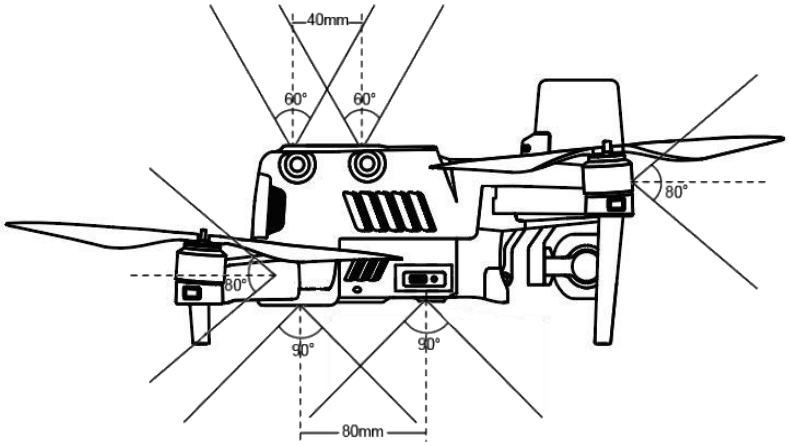

Remark

- Omnidirectional obstacle sensing directions include front, back, up, down, left and right. However, there are blind spots in the four diagonal directions. In manual flight, attention should be paid to the surrounding environment and App prompts to guarantee safety.
- Do not operate the aircraft in a complex environment where there is insufficient light, small object (such as twig, line, net), moving object, transparent surface (such as window) or reflected surface (such as mirror).
- In the case of flight with car or other vehicles, please select a field or closed road for driving. Never use it on highway.

- **Preconditions**

➢ Ensure that the aircraft is in GPS or vision positioning mode.

➢ The aircraft shall take off when the flight LED indicator flashes green slowly or red twice.

➢ When the GPS signal is weak or fails to meet the vision positioning requirement(e.g., when there are small visible textures on the surface or when the aircraft flies at an altitude of more than 12 m (36 ft) above sea level), it is necessary to be extremely careful.

➢ The binocular vision sensation system and **Starpoint™ positioning system** are affected by the brightness and texture of the surface below the aircraft. Avoid flying above the following surfaces:

- Single color
- High reflectivity, such as water surface
- Particularly bright or dark surface
- Surface with frequently changing light
- Surface composed of highly repetitive pattern, such as tile
- Sound absorbing surface, such as thick carpet
- Moving surface, such as road with heavy traffic

➢ The binocular camera lens and sensor shall be kept clean.

➢ In order to avoid disturbing the **Starpoint™ positioning system**, do not use 40 kHz

ultrasonic device, such as ultrasonic range finder, fault detector, cleaner or welding machine.

- **Function description**

➢ **Intelligent tracking**

Intelligent tracking uses deep learning algorithms to detect six types of objects in real time: pedestrians, cyclists, cars, trucks, boats and animals. Real-time tracking algorithms are used to automatically track selected objects while avoiding obstacles in flight. This function can use three modes to track objects.

➢ **Pointed flight**

Pointed flight allows the user to set the flying direction of the aircraft by touching points on the screen.

➢ **Gesture recognition**

The main camera uses deep learning algorithms to recognize and respond to three gesture instructions: straighten your arms up to set yourself as a target, raise your arms to take a photo, and raise one arm to start or stop recording.

➢ **Precise landing**

Regarding precise landing, the binocular vision system below the aircraft is used to record the information at its take-off position. During the return and landing process, the visual algorithm is used to calculate the position error between the aircraft and its take-off point in real time, so as to control the aircraft to precisely land at its take-off position.

➢ **Safe landing**

Regarding the safe landing function, the downward vision system of the aircraft is used to create a density depth map, and the flatness and angle of the depth map are calculated to detect whether the surface is flat enough to ensure a safe landing.

2.1.8 RTK module

The aircraft comes standard with onboard RTK, and with A-RTK base station or network RTK service, centimeter-level positioning can be obtained, and the accuracy of operations can be improved. Compared with the compass module, the RTK module provides combined algorithm optimization of accurate position and speed information, which improves strong magnetic environment interference capability to ensure reliable flight operations. If the real-time RTK signal is weak during photogrammetry and waypoint flight operations, and differential data cannot be transmitted normally, the original satellite observation data recorded by the aircraft can be read from the micro SD card of the camera after the flight, and centimeter-level positioning can be obtained for use by using the PPK technology.

- **Turn on/off RTK module**

Before using the RTK function each time, check to make sure that the "RTK function" switch has been turned on and a RTK service type (A-RTK or network RTK service) is correctly selected. Otherwise, RTK positioning will not be available. Enter the App camera interface> select the setting button (⚙)> RTK at the upper right corner, to view and set.

- **Use with network RTK service**

Regarding the network RTK service, the remote controller is used to replace the base station, and is connected to the designated network RTK server to send and receive differential data. Please always keep the remote controller on and connected to the Internet during use.

1. Ensure that the remote controller has been connected to the aircraft and can access to the Internet.
2. Enter the camera interface of Autel Explorer App> select the setting button ( )> RTK at the upper right corner, and select the RTK service type as "Network RTK". Autel Robotics has given users a designated network RTK package, which does not need to be purchased during the validity period. If the package expires, users can renew the purchase by themselves.
3. Wait to establish a connection with the network RTK server, the network RTK status icon in the setting is displayed as ( ), indicating that the network RTK data has been obtained and used.

- **Use with A-RTK base station**

1. Set up the base station at a place with a wide view and mark it, and adjust the base station to a suitable height.
2. Turn on the power of the base station, and wait for system initialization.
3. Turn on the power of the remote controller and the aircraft, enter the camera interface of Autel Explorer App> select the setting button ( ) > RTK at the upper right corner, and select the RTK service type as "A-RTK".
4. Confirm that the base station RTK indicator is green, indicating that the base station RTK is working normally. Enter the App camera interface and check that the RTK status in the upper status bar is FIX, indicating that the aircraft has entered the RTK positioning mode.

2.1.9 Industry application

EVO II RTK series can be widely used in industries such as routing inspection and surveying and mapping. Users can choose multiple task modes such as waypoint tasks, rectangular tasks, polygon tasks and oblique photography through the Autel Explorer™ App. After planning the route and setting the parameters, the aircraft can perform work automatically, and avoid obstacles by using the vision system. Users can import aerial data into third-party mapping software for high-precision map synthesis or other operations, for better application to various scenarios.

- **Waypoint task**

Add waypoints by users, set parameters and actions of the aircraft at each waypoint, and connect the waypoints in order to form a route. After calling and executing operations, the aircraft will automatically fly along the route and perform corresponding actions at each waypoint.

1. Click "Task Flight" on the main interface of the App, and select "Waypoint Task" to enter the planning interface.

2. Add a waypoint on the map, and set corresponding parameters and actions of the aircraft at the point.

- Flight height: the height relative to that of the return point when the aircraft flies to this waypoint. The aircraft will gradually adjust the flight height to the set value during the flight to this waypoint. Click the waypoint> select "Flight Height"> slide left and right to change

the value.

- Flight speed: the flight speed when the aircraft flies to this waypoint. The aircraft will gradually adjust the flight speed to the set value during the flight to this waypoint. Click the waypoint> select "Flight Speed"> slide left and right to change the value.
- Action: Click the waypoint> select "Action"> set the waypoint action and camera action. The waypoint action comprises "Fly Over" and "Hover".

  A. When "Fly Over"is selected, camera actions of imaging, timed imaging, fixed distance imaging, video recording start and video recording stop can be selected, or no action is added.

  B. When "Hover"is selected, camera actions of timed imaging and video recording (1-10s) can be selected.
- Gimbal pitch angle: the gimbal pitch angle (0°-90°) when the aircraft flies at the moment. Click the waypoint> select "Action"> add camera action> slide left and right to adjust the pitch angle.
- Yawing angle: the heading direction of the aircraft flying to the waypoint. Click the the waypoint> select "Action"> add camera action> select the yawing angle mode.

  A. Along the route: the aircraft turns to a next waypoint according to a set route.

  B. Manual: the user controls the course of the aircraft through the remote controller.

  C. User-defined: the user can set the yawing angle of each waypoint.
- Longitude and latitude: the longitude and latitude of the waypoint can be adjusted.
- Associated points of interest: the main purpose of points of interest is to describe the address of things or events, such as banks, schools, hospitals and other geographic entities. Edit points of interest＞click points of interest＞associate with waypoints.

Regional task

The user can choose from three regional tasks (rectangular task, polygon task and oblique photography). The user can set the flight parameters of the aircraft, and the system will calculate and plan a flight route.

1. Click "Task Flight" on the main interface of the App, and select rectangular task, polygon task and oblique photography to enter the planning interface.
2. Generate a project, you can manually move, zoom in, or zoom out the task area. After the area is selected, click the bottom menu to modify the parameters.

- Rectangular task: Generate a rectangular flight area. When the double grid is turned off, the aircraft flies along a bow shape, which is applicable to orthophoto data acquisition. When the double grid is turned on, it flies along a tic-tac-toe shape, which is applicable to 3D modeling.
- Polygon task: Generate an irregular rectangular flight area. When the double grid is turned off, the aircraft flies along a bow shape, which is applicable to orthophoto data acquisition. When the double grid is turned on, it flies along a tic-tac-toe shape, which is applicable to 3D modeling.
- Oblique photography: The generated route is composed of one orthographic route and four oblique routes, applicable to accurate 3D modeling.

	Rectangular task	Polygon task	Oblique photography
Flight altitude	√	√	√
Oblique height	√	√	√
Ground resolution (GSD)	▲	▲	▲
Oblique ground resolution	×	×	▲
Flight speed	√	√	√
Oblique speed	×	×	√
Forward overlap rate	√	√	√
Oblique forward overlap rate	×	×	√
Sidelap rate	√	√	√
Oblique sidelap rate	×	×	√
Gimbal pitch angle	√	√	√
Oblique gimbal pitch angle	×	×	√
Return action	Return/hover	Return/hover	Return/hover
Main rout angle	√	√	√
Double grid	√	√	×
Remark	√-adjustable ×-unadjustable ▲-only to display value, unadjustable		

Remark

- Forward overlap rate: the overlap area rate of the ground taken by adjacent photos along the flight direction; sidelap rate: the overlap rate between two adjacent flight imaging zones. When the aircraft is shooting at a low altitude or shooting areas with uniform surfaces (such as water, desert, fields and vegetation), increasing the overlap rate is conducive to image splicing and processing later.
- Ground resolution: it describes the actual physical size of a pixel. The smaller the value is, the clearer the image is.

Important

If any of the following conditions are detected, the flight task ends automatically, and the UAV will perform other operations on the basis of the following conditions.

- **Low battery level:** A message will be popped up on the App interface to inform you that the

aircraft will return automatically.

- **Very low battery level:** The aircraft will end the task and automatically land on the spot.
- **Too weak GPS signal:** The UAV enters the ATTI mode and switches to manual control.

- **Historical task**

The user can name and save the flight tasks, which are displayed in the order of creation time. The most recently saved tasks are at the top of the list, and the earlier ones at the bottom. You can also find corresponding historical tasks by searching (🔍) file names.

2.2 Remote controller

The remote controller supports real-time video downlink and can be used separately from mobile devices. The working frequency of the video downlink system and UAV remote control system is 2.4 GHz. Real-time video images, battery level, GPS signals, flight speed, etc. are displayed on the 3.3-inch OLED screen.

2.2.1 Function description

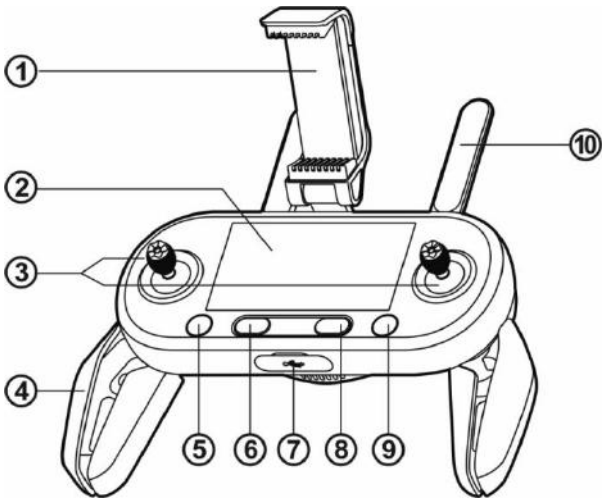

① Mobile device support	A viewing angle of 180º can be adjusted, to provide an optimal viewing effect.
② Flight information panel	To display flight status, warning messages and real-time video images.
③ Rocker	Control the direction and motion of aircraft.
④ Handle	Foldable to reduce the storage space.
⑤ Take-off/landing button	To manipulate the aircraft to take off or land down.
⑥ Power button	Long press the button for 2s to turn on/off the remote controller.
⑦ USB port	To charge or connect mobile device
⑧ Pause button	Indicate the suspension of the autonomous flight of aircraft and hovering on the spot or the recovery of the autonomous flight.
⑨ Return button	Command the aircraft to return waypoint.
⑩ Antenna	The frequency for communication with aircraft is 2.4/5.8 GHz

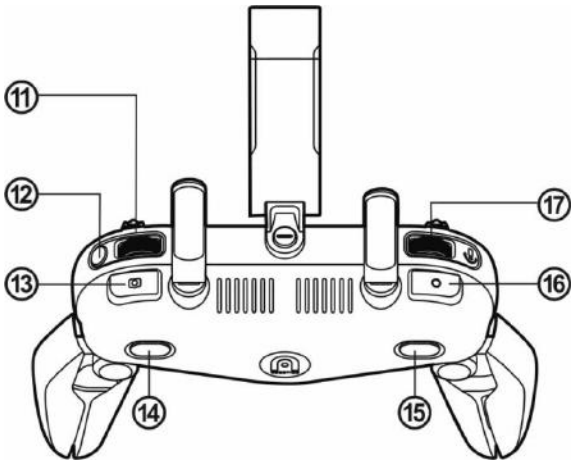

⑪ Screen navigation thumbwheel	Roll to browse the OLED screen.
⑫ Screen navigation button	After the mobile device is disconnected, press the button for 1s to enter/exit the Image Transmission screen on the remote controller.
⑬ Shutter button	To take photos. After the continuous mode is turned on, press the button once to take multiple images.
⑭ Button A	Use Autel Explorer App to set functions.

⑮ Button B	Use Autel Explorer App to set functions.
⑯ Video button	To start or stop video recording.
⑰ Gimbal pitch angle thumbwheel	To control the pitch angle of the camera gimbal

2.2.2 Real-time observation panel

- **Flight information panel**

After the aircraft is connected, the following main interface will be displayed.

① Flight height	The altitude of the aircraft relative to the return point
② Flight distance	The horizontal distance between the aircraft and the return point
③ Flight speed	Current flight speed of the aircraft
④ Angle of inclination	The angle of inclination of the camera under control of the gimbal (0º to 90º)
⑤ Flight status bar	To display real-time flight status and current flight mode
⑥ Vision system	To indicate whether to activate the vision obstacle avoidance system or not
⑦ Remote controller battery	To display current battery level: ● The green bar refers to normal battery level (approximately 11%-100%) ● The red bar refers to low battery level (approximately 10%)

⑧ Remote controller signal	To display current signal intensity
⑨ Remaining flight time	Estimated time that the aircraft can stay in the air based on the remaining power
⑩ Storage mode	To indicate whether the image and video are stored in the memory carried by the aircraft self or Micro SD card
⑪ GPS signal	To indicate the signal intensity of GNSS satellite nearby
⑫ Aircraft battery	To display current battery power: ● The green bar refers to normal battery level ● The orange bar refers to low battery level ● The red bar refers to very low battery level Remark: You can use Autel Explorer™ App to set the battery level threshold.
⑬ Camera mode	To display current camera mode

- **Image transmission mode**

To enter the image transmission mode, press the Screen Navigation button (DISP) on the remote controller. Then operate by the following steps:

1. Roll the screen navigation thumbwheel to highlight different setting options.
2. Press the screen navigation thumbwheel to enter highlighted options.
3. Roll the screen navigation thumbwheel again to set different values.
4. Press the screen navigation thumbwheel to confirm the value, or press the Screen Navigation button (DISP) to return.
5. Press "Shutter" to take photos.
6. Press "Record"to start or stop video recording.

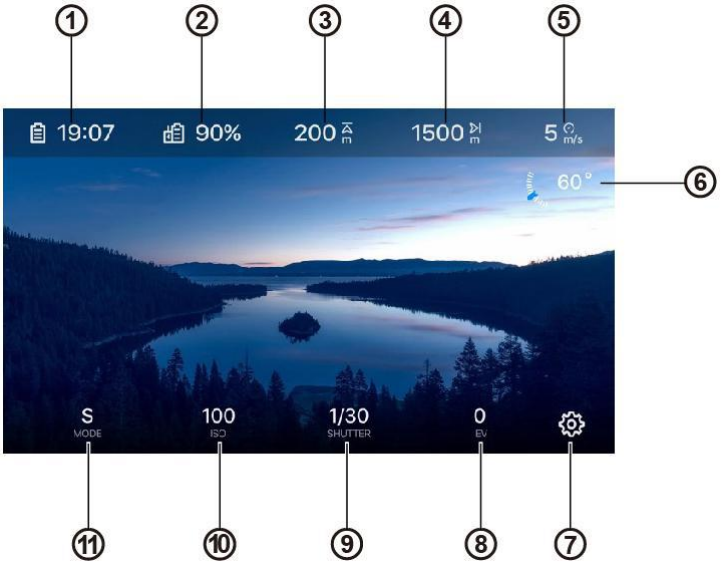

① Remaining flight time	Estimated time that the aircraft can fly in the air based on the remaining power
② Remote controller battery	To display current battery level
③ Altitude	To display the altitude of the aircraft relative to the return point
④ Distance	To display the horizontal distance between the aircraft and the return point
⑤ Flight speed	To display the current flight speed of the aircraft
⑥ Gimbal angle	This value indicates the gimbal angle in unit of degree. The blue arrow will move along with change of the gimbal angle.
⑦ Setting	Press the button to visit the Setting page
⑧ EV	Exposure Value (EV) is a combination of ISO and shutter speed, used when the camera is set as Auto. Adjust EV to increase or reduce the exposure degree.
⑨ Shutter	A moving scene can be captured at a rapid shutter speed; A slow shutter speed is applicable to scene with weak light.
⑩ ISO	This setting is to adjust the sensitivity of the image sensor to light. A lower ISO is suitable for scene with brighter light, and a higher ISO is suitable for scene with weak light, but it will increase image noise.
⑪ Exposure mode	ISO and shutter speed can be adjusted when the camera is set to Manual, or select Auto to enable the system to adjust automatically. ● Manual: EV setting is disabled. ● Auto: ISO and shutter speed settings are disabled. ● Shutter Priority: the shutter speed and EV can be adjusted.

● Setting

➢ Instructions for Basic Use

1. Roll the screen navigation thumbwheel to highlight different setting options at the upper part of the display screen.
2. Press the screen navigation thumbwheel to enter the highlighted options, or press the Screen Navigation button (DISP) to return.
3. Roll the screen navigation thumbwheel again to set different values.
4. Press the screen navigation thumbwheel to confirm the value, or press the Screen Navigation button (DISP) to return.

➢ Camera setting

Camera mode	Video, single, continuous (3/5 frames), timed (2/5/7/10/20/30/60s), AEB (3/5), pure night scene, HDR imaging, long exposure
Video resolution	8K (7680x4320), 6K (5760 x 3240), 4K (3840 x 2160), 2.7K (2720 x 1528), 1080p (1920 x 1080)
Video frame rate	120 fps, 60 fps, 50 fps, 48 fps, 30 fps, 25 fps, 24 fps
Photo resolution	Visible light mode: 8000 x 6000, 7680 x 4320, 4000 x 3000, 3840 x 2160 Infrared mode: 640 x 512 Picture-in-picture mode: 1920 x 1080, 1280 x 720
Picture format	Infrared camera: TIFF+JPG (with irg file) Visible light Camera: JPG, RAW, JPG+RAW
HDR	On/off
Display mode	Visible light, infrared ray, picture-in-picture
Pseudo-color mode	White hot, cold hot, rainbow, enhanced rainbow, iron red, lava, aurora, searing, gradient, heat detection

➢ **Flight control setting**

- Turn on/off beginner mode.
- Select speed control value.
- Adjust return height, height limit and distance limit.

Remark

- When the beginner mode is activated, the aircraft will operate at a fixed maximum return height of 30 m (90 ft), 5 m/s (15 mph) speed limit, 30 m (90 ft) height limit and 100 m (300 ft) distance limit. At the moment, the setting value cannot be modified by manipulating the navigation thumbwheel on the screen.

➢ **Remote controller setting**

1. Rocker mode

Mode 1 (Japanese manipulator), mode 2 (American manipulator) and mode 3 (Chinese manipulator) enable you to control the aircraft based on your own preference, as shown below.

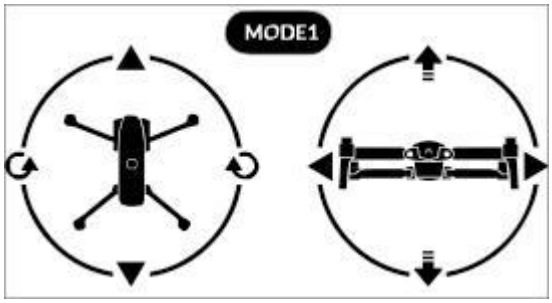

Indicator		Aircraft motion	
⬆	⬇	Raise	Descend
↺ / ↻	↩ / ↪	Turn the head left	Turn the head right
▲	▼	Forward	Backward
◀	▶	Leftward	Rightward

2. Remote controller calibration

Please refer to **3.2.3 section (** **)** for detailed instructions of calibration.

➢ **Vision setting**

Access these settings to turn on/off and select visual obstacle avoidance.

Display the radar map.

➢ **General setting**

1. Language: Select display language.

2. Unit: Select the measurement unit displayed in the flight control setting: Metric system (m/s), metric system (km/h) or imperial system

3. SD card formatting: Use the function to ensure that your SD card is in a usable format.

4. Camera reset: Use the function to recover all camera settings into default settings.

2.2.2 Remote controller alarming sound

Various alarming sound and corresponding meanings are described in the table below.

Remote controller alarming sound	
Alarm of low aircraft battery level (The default is 25%)	Make a short beep every second for 5s, and the remote controller vibrates twice at the same time
Alarm of very low aircraft battery level (The default is 15%)	Make five short beeps every second for 5s, and the remote controller vibrates for five times at the same time
Alarm of low remote controller battery level (The default is 10%)	Make a short beep every second for 5s
Alarm of very low remote controller battery level (The default is 5%)	Make five short beeps every 3 seconds, and the remote controller vibrates twice at the same time
Communication outage of the aircraft and the remote controller	Make two short beeps every second for 5s, and the remote controller vibrates once at the same time
Video link disconnection	Make three short beeps within one second
Compass interference	Make three short beeps, and the remote controller vibrates for three times at the same time
Standby notification	After the remote controller is turned on and limited for 15 minutes, three beeps are made consecutively.

Chapter 3

Flight preparation

The EVO II RTK series is convenient and unique in design and is fully assembled before delivery. To ensure the safe operation of the UAV, please read the following instructions and warnings before the first flight.

3.1 Battery preparation

3.1.1 Install aircraft battery

1. Turn off the battery power switch before installing battery.
2. Insert the battery into the battery compartment. There will be clicking sound when the battery is installed in place.

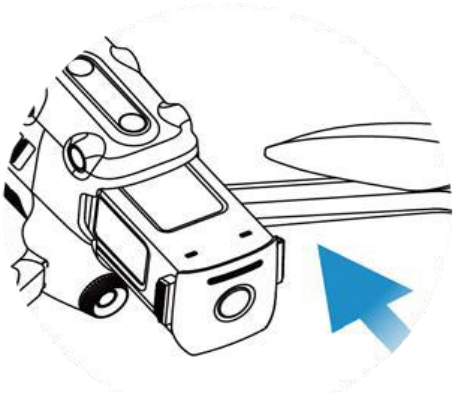

3.1.2 Disassemble aircraft battery

1. Turn off the aircraft battery power switch before taking out the battery.
2. Press the buckles at two sides of battery and slowly take out the battery.

3.1.3 Charging

The aircraft battery and remote controller can use the charger for charging. The two connectors are connected with the charger. As shown in the figure below, the fixed plug is connected with the aircraft battery, and USB charge wire is used for charging the remote controller.

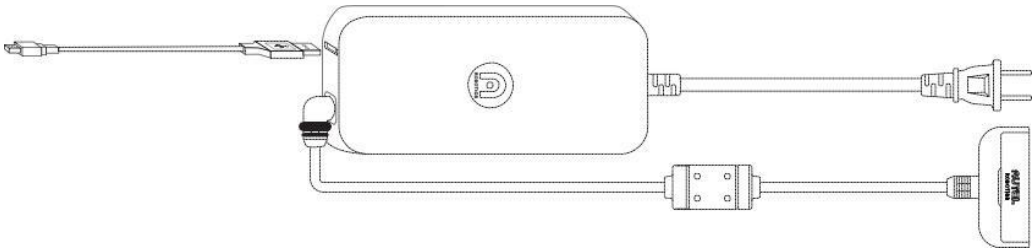

- **Charge the aircraft and the remote controller**

1. Insert the charge wire by the following steps:

Aircraft battery: Insert the charge connector into the charge interface of the battery.

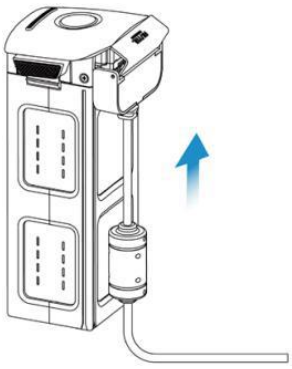

Remote controller: Open the protective cover of USB port, and insert the charge wire provided.

2. Insert the charger into the power supply socket.

- **Battery level indicator:** The LED indicators on the aircraft battery light up in order from left to right to indicate the current battery level during the charging cycle, and turn off when the battery is fully charged.

Battery level indicator status (Charging status)			
0%~25%	26%~50%	51%~75%	76%~100%
▮ - Green is normally on	▯ - Green is flashing		

➢ **During charging:** The remote controller power button (⏻) turns green when the power switch is turned on, and turns red when the power switch is turned off. You can monitor the charging process through the flight information panel. Two beeps are made when the charging is complete.

3. After charging is complete, disconnect the charger from the aircraft battery/remote controller.

Remark

- The batteries of the aircraft and the remote controller shall be alway fully charged before flying.
- At most 90 minutes are required to fully charge the aircraft battery, and approximately 180 minutes are required for the remote controller.

3.2 Remote controller preparation

3.2.1 Extend remote controller

The remote control is folded in the packing box. Please carefully extend the **mobile device support** and **antenna** before use to prevent damage and ensure the best flight range.

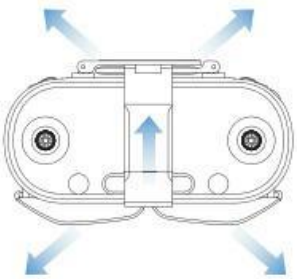

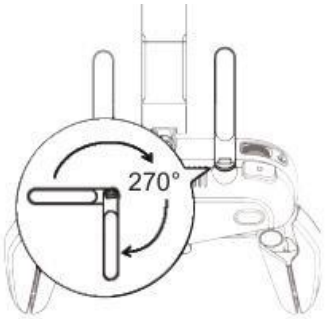

Remark

- As shown in the figure, the antenna can be turned for 270 degrees.

- **Antenna position adjustment**

Keep the two antennas upright and parallel to each other, as shown in the figure below.

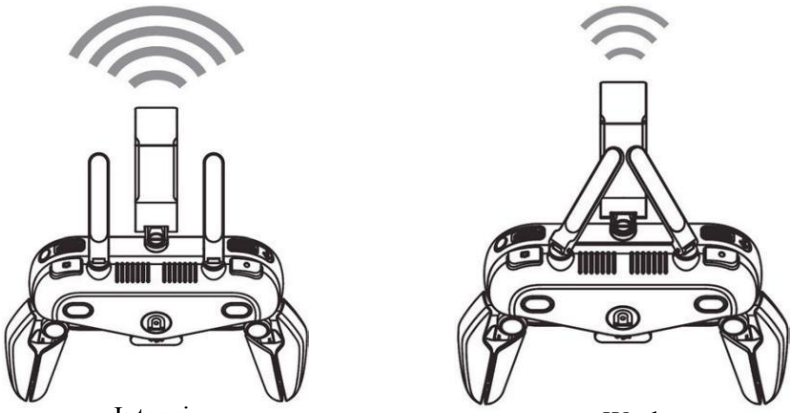

Intensive Weak

3.2.2 Turn on/off remote controller

- **Power on**

Press and hold the power button (⏻) for 2s until you hear a short beep. The flight information panel will light up, and startup inspection is performed.

Important

- Before the aircraft power switch is turned on, always turn on the remote control first.

- **Power off**

Press and hold the power button (⏻) for 2s until you hear a short beep.

Important

- Before the remote controller is turned off, always turn off the aircraft power switch first.

Remark

- When the aircraft is not connected, if there is no operation for 15 minutes, the remote controller makes beep and will automatically turn off after 18 minutes.

3.2.3 Remote controller calibration

If the **rocker** is abnormal (for example, the remote controller falls on the ground or the flight direction of the aircraft is not consistent with its operation direction), the remote controller is recommended to be calibrated. You can calibrate the remote controller by using Autel Explorer App, or calibrate by the following steps.

1. Turn off the remote control. Press and hold the power button ( ) and takeoff/landing button ( ) at the same time until the screen appears, as shown right. The four cross bars represent the left and right rockers. The top horizontal bar is the gimbal pitch angle thumbwheel.

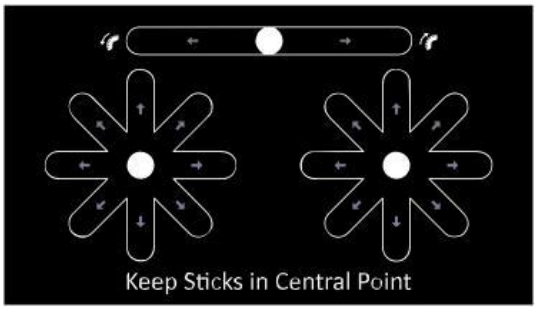

2. Release the rocker and the gimbal pitch angle thumbwheel to return them to the center position naturally. The three center dots on the calibration screen of the remote controller will be highlighted in turn.

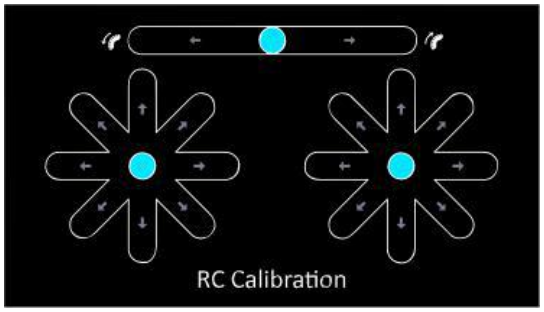

3. Push and hold the **rocker** in eight directions one by one until you hear a beep. Then turn the **gimbal pitch angle knob** clockwise until you hear a beep, and turn it counterclockwise until you hear a beep.

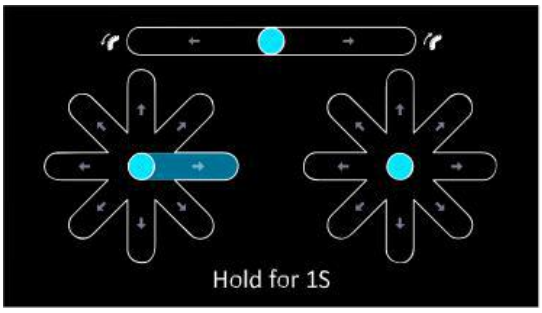

4. Push and hold the **rocker** in eight directions one by one until you hear a beep. Then turn the **gimbal pitch angle knob** clockwise until you hear a beep, and turn it counterclockwise until you hear a beep.

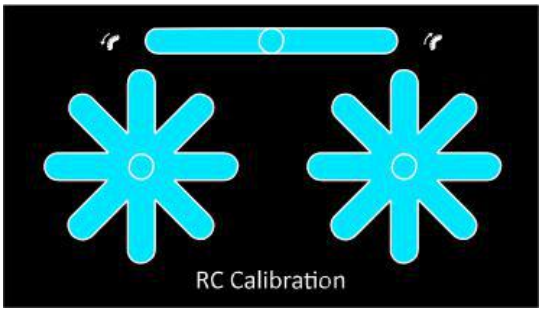

3.2.4 Aircraft and remote controller pairing

The remote controller and the aircraft have been paired in factory. If they need to be paired again, for example, when the **remote controller pairing button** of the aircraft is pressed down, please carry out the following operations:

1. Turn off the remote controller

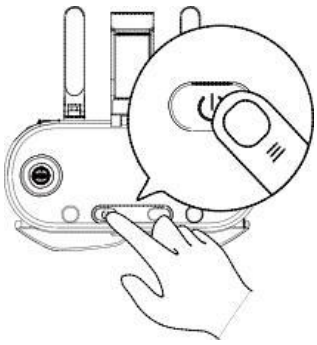

2. First take down the gimbal protective cover, and **turn on** the aircraft.

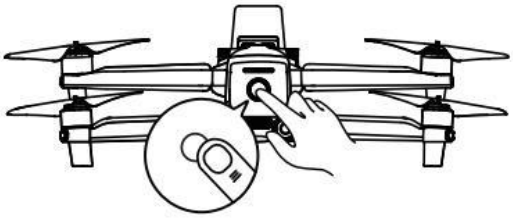

3. Press the remote controller pairing button for 3s at the right lower part of the aircraft. The pairing indicator flashes rapidly, indicating that the aircraft is prepared to be paired with the remote controller.

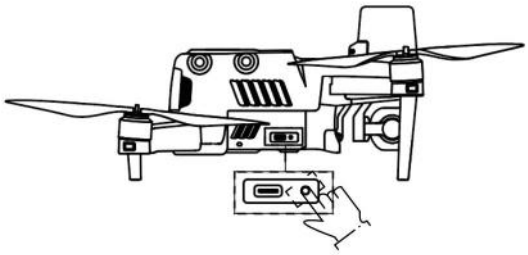

4. Press and hold the power button (⏻) and return button(🏠) for 2s at the same time until "Autel"shows on the flight information panel. After pairing is successful, the pairing indicator on the aircraft will turn off.

5. To pair a second remote controller, press and hold the power button and user-defined button B for at the same time until "Autel" shows on the information panel.

3.3 Aircraft preparation

3.3.1 Extend aircraft

- **Take down and reinstall the gimbal protective cover**

Please always remove the gimbal support before turning on the aircraft power switch. Slowly pull out the installed gimbal protective cover, as shown in the figure below.

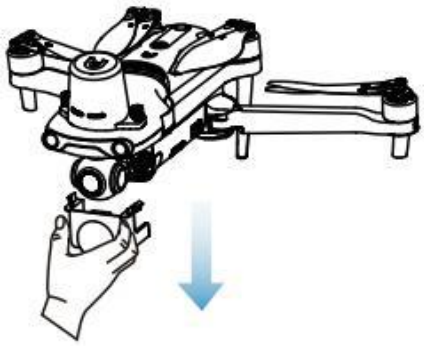

After the aircraft is used, the gimbal protective cover shall be reinstalled to prevent the gimbal from damage.

- **Extend the arm and propeller**

➢ Please remember to always extend the arm of the aircraft before turning on the aircraft power switch.

➢ Please first extend the front arm, and then the rear arm.

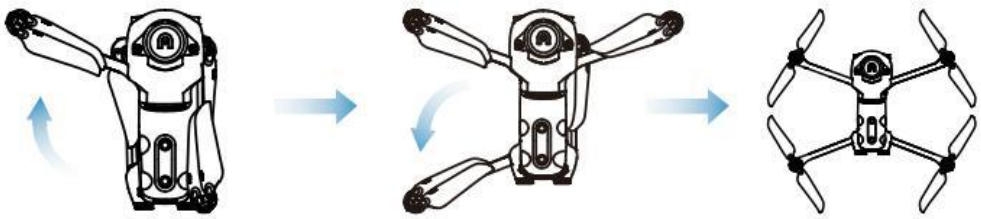

Important

- Before turning off the remote control, always turn off the aircraft power switch. Before folding the arms, turn off the aircraft power switch. Fold the rear arm and propeller first, and then fold the front arm.

3.3.2 Install the propeller

EVO II RTK series use noise-reduction rapid-disassembled propellers.

Warning

- Before installing or disassembling the propeller, please turn off the aircraft power switch first.

Important

- Wear protective gloves when installing or disassembling the propeller.

- **Install propeller**

1. Confirm that the aircraft has been turned off.
2. Select the propeller matched for each motor.
3. Forcibly press down the propeller and rotate it along the locking direction till that it is installed firmly.

Propeller	With white mark	Without white mark
Schematic diagram		
Installation position	Installed to the mount with white mark	Installed to the mount without white mark
Legend	ing direction: rotate the propeller to tighten it as shown in the figure. Unlocking direction: rotate the propeller to remove it as shown in the figure.	

- **Disassemble propeller**

1. Turn off the aircraft.
2. Forcibly press down the propeller and rotate it along the unlocking direction till that it is removed.

Important

- Check to confirm that each propeller has been installed firmly before flight.
- Do not use the damaged propeller for flight.
- It is forbidden to touch the rotating propeller or motor.
- It is always necessary to take down the propeller before motor test.

3.3.3 Compass calibration

The compass has been calibrated in factory, with no need for calibration by user normally. If the compass indicates the error information, or the flight direction of the aircraft is not consistent with the control input, or the flight place is far from the calibrated distance, please carry out the following calibration procedure.

Warning

- The compass is very sensitive to the electromagnetic interference that may cause the compass error and the flight quality reduction. If the company still fails to be used after calibration, it is allowed to move the aircraft to other places for recalibration.

In the case of compass calibration, please pay attention to the following points:

- Select an open outdoor area.
- Keep away from the magnetic interference source, such as magnet or concrete reinforcement. The calibration result may also be affected if close to a large structure.
- Keep away from the underground and overhead power lines.
- Never carry the ferromagnetic materials (such as key or magnetic ornaments) with you.

- Keep away from all electronic devices (such as mobile device) that may interfere with the calibration.

- **Calibration procedure:**

1. Press the takeoff/landing button ( ) and return button ( ) on the remote controller at the same time for 3s. When the calibration process starts, the LED indicator on the back of the aircraft turns yellow and flashes.
2. Hold the aircraft and make it horizontal, and then rotate the aircraft till the rear LED indicator of the aircraft is normally on green.
3. Hold the aircraft and make it vertical with the head downwards, and then rotate the aircraft till the rear LED indicator of the aircraft is normally on green.
4. Hold the aircraft with the head forwards and the side downwards, and then rotate the aircraft till the rear LE
D indicator of the aircraft is normally on green.

Remark

- If the calibration fails, the rear LED indicator of the aircraft will be normally on red. At this point, repeat the above procedure.
- You can also calibrate the compass with the Autel Explorer App.

Chapter 4

Flight Operation

4.1 Check list before flight

Perform comprehensive check before flight by the following steps:

- Fully charge the aircraft battery, remote controller and your mobile device.
- Take down the gimbal protective cover.
- Confirm that the propeller is intact and correctly installed.
- Set the position of the remote controller antenna as per 3.2.1.
- Pair the aircraft battery and the remote controller.
- Check that the firmware has been upgraded to the latest version indeed.
- Ensure that you are familiar with flight control operation.
- Check whether the flight area is open without obstacle.
- Check the weather, including the window and the air speed.
- Check whether the camera lens and sensor of the aircraft is clean.

4.2 Remote controller and flight operation

This aircraft includes three **rocker** modes: **American manipulator, Chinese manipulator and Japanese manipulator**. Each mode has different control on the aircraft. The default mode is the **American manipulator**.

Remark

- American manipulator: the rocker controlling the accelerator is the left rocker of the remote controller.
- Japanese manipulator: the rocker controlling the accelerator is the right rocker of the remote controller.
- The accelerator rocker is used to control the aircraft to raise and descend.

Reminding

- The rocker modes, which can be switched in the **Autel Explorer™** App, can be selected according to operation habits, and the American manipulator is recommended for the beginner.

- **Basic flight**

1. Place the aircraft at an open area. Stand at least 5 m (15 ft) from the tail of the aircraft.
2. Turn on the remote controller.
3. Turn on the aircraft, and wait the LED indicator at the tail to turn green and flash slowly.
4. Start the motor with the remote controller to take off.
5. Carefully navigate and manipulate the aircraft.
6. Land down the aircraft, and turn off the motor.

4.2.1 Motor start and aircraft takeoff

Remark

- The aircraft cannot fly when the battery level is 15% or below.

➢ As shown in figure, press the left and right **rockers** for 2s to start motor:

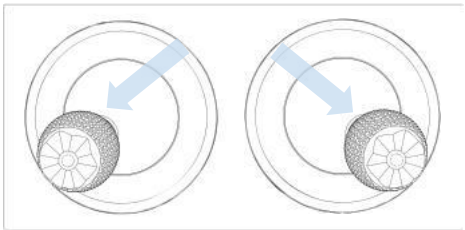

or

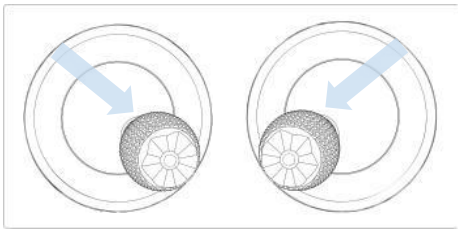

➢ select any one of the following takeoff instructions:

Press and hold takeoff/landing button for 3s

or

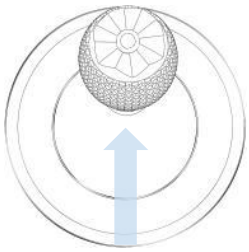

Push the left rocker upwards slowly (mode 2)

The aircraft will automatically rise to the height of about 1.5 m (4.5 ft) if you choose to use the takeoff/landing button ( ).

Warning

- Motor will generate heat during operation. Please operate with care.

4.2.2 Manipulator control (American manipulator)

Reminding

- If you are the first time to control the aircraft, please move the rocker gently till that you are familiar with its operation.

- **Left rocker**

➢ **Raising/descend**

Push the rocker up and down, to control raising and descending of the aircraft.

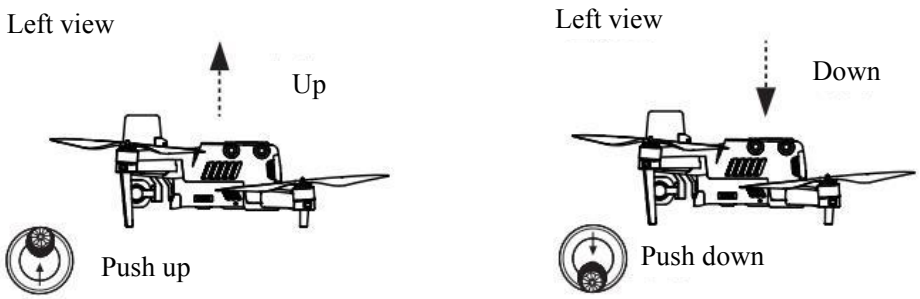

➢ **Rotate leftwards/rightwards**

Push the rocker leftwards or rightwards, to control the heading direction of the aircraft.

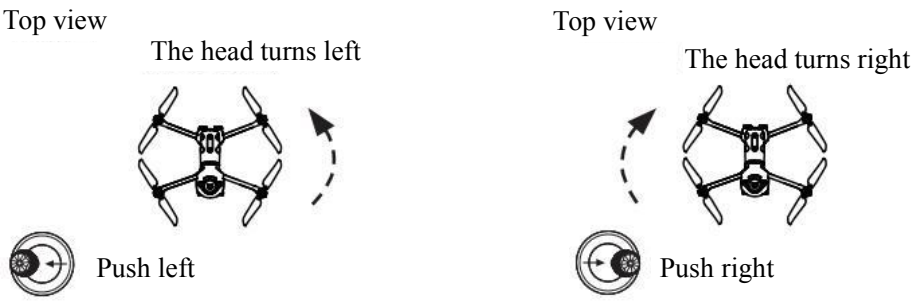

- **Right rocker**

➢ **Forwards/backwards**

Push the rocker forwards and backwards, to control the aircraft to move forwards and backwards.

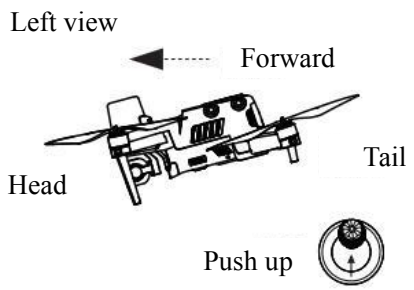

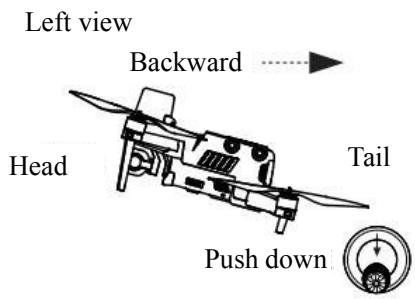

➢ **Move leftwards/rightwards**

Push the rocker leftwards or rightwards, to control the aircraft to move leftwards or rightwards.

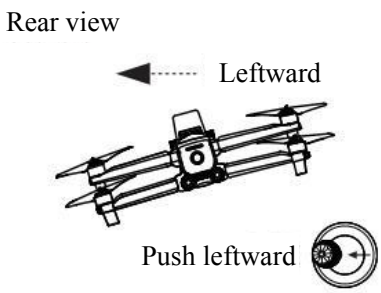

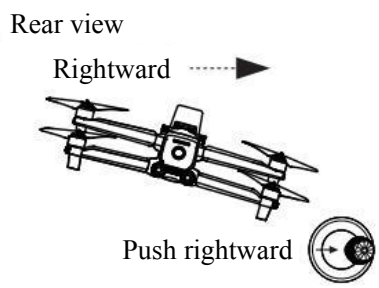

4.2.3 Landing and motor off

EVO Ⅱ RTK series can be manually, automatically or passively landed. Steps to operate the aircraft to land down by using the three methods are as follows:

Important

- Always land on a flat and open surface.

- **Manual landing**

You can use the **rocker** of the remote controller to manually land the aircraft anytime and anywhere.

➢ **Move leftwards/rightwards**

1. Find an appropriate aircraft landing position.
2. When the aircraft arrive above the target position, release the rocker to make the aircraft hover.
3. Slowly push down the left rocker to land the aircraft.

➢ **Turn off the motor**

When the aircraft lands on the ground, select one of the following methods to turn off the motor:

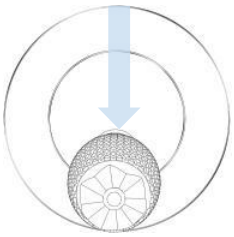

or

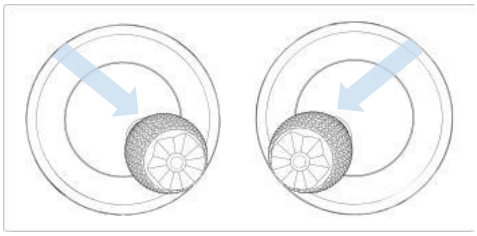

Push the left rocker to the bottom and hold in the position for 2s

Push two rockers inwards and hold in the position for 2s

● Automatic landing

Press the **takeoff/landing button** ( ) of the aircraft to enable the aircraft to automatically land down from its current hover position.

1. Manipulate the aircraft to the target landing position.
2. Release the rocker to enable the aircraft to hover above.
3. Press and hold the takeoff/landing button ( ) for 2s until the remote controller makes a beep.
4. The aircraft will automatically descend, land and turn off the motor. During the descending process, you can adjust the aircraft position by using the right rocker.

Reminding

- During the automatic landing, you can recover the control on the aircraft when pressing the pause button ( ) of remote controller.

Remark

- The automatic landing can also be used in ATTI mode(12). However, the aircraft may drift in this mode, so its flight height shall be monitored.
- In the case of low battery alarm (25%) , the rear LED of the aircraft will flash red. The remote controller power supply button ( ) is normally on yellow. At this time, it is necessary to return the safe landing point as soon as possible.

- **Passive landing**

When any of the following conditions are met, the fail-safe protection will be triggered and the aircraft will automatically land from its current position.

- **The alarm of low battery level** can be activated in a non-GPS environment.
- **Alarm of very low battery level** is activated.

Chapter 5

Maintenance and service

5.1 Firmware update

In order to optimize the system performance of EVO II RTK series aircrafts, Autel Robotics will update relevant firmware when necessary.You can download a unified firmware upgrade package on the official website, which contains the latest versions of various firmware such as flight controller, gimbal, camera, smart battery and remote controller. When the system detects new firmware version, Autel Explorer APP will open a prompt box after it is connected with the aircraft to remind you to download and install the new version.

Important

Before firmware update, please ensure that:

- The aircraft motor is not powered on.
- The power levels of the aircraft and the remote controller are not lower than 25%.
- The Micro SD card of the camera has enough space to store firmware files.

- **Download and update firmware**

1. Download the all-in-one firmware upgrade package from the official website of Autel Robotics: www.autelrobotics.com/download/163
2. Insert SD card into your computer, save the downloaded firmware package under the root directory of SD card, and then remove the SD card from the computer.
3. Turn on your remote controller and aircraft.
4. Insert SD card into the aircraft for automatic update. User can view the upgrade process on the flight information panel.
5. Restart the remote controller and the aircraft after update.

Important

- The update takes about 15 minutes. During the update process, do not turn off the aircraft or remote controller, start the motor, or remove the SD card from the camera.
- After the upgrade, the remote controller may be disconnected from the aircraft. Please refer to Section 3.2.4 to pair them again.

5.2 Solutions to common faults

Q1. The aircraft displays a fault during the self-inspection (the tail LED indicator is normally on red):

- Hardware problems are detected. Please contact the **intelligent customer support of Autel Robotics** here: www.autelrobotics.com/page/contact

Q2. If the motor cannot be started, please check the following:

- Whether the remote controller and the aircraft are paired.
- Whether the remote controller is correctly calibrated.
- Whether the aircraft battery is fully charged.
- Whether the compass is correctly calibrated.
- Whether the GPS can be used (when the **beginner mode** is started).

Q3. If the aircraft cannot take off after the motor is started, please check the following:

- Whether the aircraft is in a restricted area.
- Whether the aircraft is on a flat surface.

Q4. The flight time is shortened:

- The most common reason for shortened flight time is the influence of low ambient temperature, wind strength, etc.

Q5. The aircraft does not respond to the remote controller during pairing:

- Confirm that there is no metallic object, mobile device or other remote controller nearby.

Q6. The video link has fault or is frequently disconnected:

- Confirm that there are no sources of magnetism or signal interference around the aircraft and remote controller.

Q7. The camera is automatically turned off in the video recording process:

- Do not take out the Micro SD card from the camera, but restart the camera and wait that the video files may be recovered as much as possible.

Q8. The video link is disconnected when the aircraft is not in the range of visibility:

- Activate the auto return instruction to return the aircraft to the return point.

Q9. Cautions to use the omnidirectional binocular vision system:

- Before flying, make sure that the 12 cameras are clean and free of obstructions. Omnidirection refers to six directions, including forward, backward, leftward, rightward, upward and downward.
- There is a blind zone of 30º in the four diagonal directions of the aircraft. Please pay attention to the surrounding environment and the safety instructions of the APP.
- Obstacle detection is achieved by detecting the surface texture of the obstacle. In case of no texture, repeated texture, pure color surface, moving object, tiny object, etc., the detection function will not be realized normally.

Q10. The precise landing function is not realized normally:

- The precise landing function is realized by detecting the texture of the ground when the aircraft takes off with the binocular camera below.
- If there is no texture on the ground, or the camera below is damaged, this function will not be realized normally.

Q11. The omnidirectional binocular vision system cannot work normally:

- Restart the aircraft, and check whether it can work normally or not again.

Q12. The video is obliqued during flight:

- Horizontally place the aircraft and keep it steady.
- Calibrate the gimbal according to the "Automatic Gimbal Calibration" function in the APP.
- If the problem is still not solved, adjust the gimbal according to the instructions in the "Gimbal Fine Tuning" function.

Q13. The lens of the binocular camera is stained:

- Please wipe the lens with the glasses cloth gently. It is recommended to use the glasses cloth provided in the packing box.

Q14. Vision errors in the flight process:

- Please calibrate the binocular parameters by using the PC calibration tool which can be downloaded from the official website.

5.3 Storage and maintenance

In order to ensure the optimal performance of EVO Ⅱ RTK, please read and abide by the maintenance instruction of this section carefully.

- Store the aircraft, battery and remote controller in a clean, dry, cool and well-ventilated place.
- Protect the aircraft from direct sunlight when it is not used.
- Please wipe dry your two hands before operating the aircraft.
- Clean the camera lens with the soft cloth with alcohol or gentle window cleanser. Do not use any strong cleanser, detergent or chemical.
- Keep the battery charger clear of other conducting materials.
- Avoid the aircraft and its accessories falling, especially falling on a hard surface. Carefully check all components after each collision or impact. Please contact the customer support of Autel Robotics for any damage.
- Only use the accessories authorized by Autel Robotics, such as charger. We will provide no warranty for any accident due to the use of unapproved accessories.

5.4 Warranty

Autel Robotics Co., Ltd (hereinafter referred to as "the Company") promises to the original retail buyer of the product that: under the normal use condition, if the product or its any part is certified to have defect in material or technology, causing equipment fault, then you can, within the warranty period (calculated from the date of delivery), carry your proof of purchase for free repair or replacement service by the Company.

Scope of service:

- Within the warranty period, the product has the non-human performance fault during normal use;
- The product is not disassembled without approval or modified or added as instructed by non-official manual, or has other non-human faults;
- The equipment serial number, factory label and other marks are not torn away or altered;
- The effective proof of purchase, document and document number are provided;
- This service is only applicable to the China mainland, and other countries and regions shall be subject to local policies, laws and regulations.

This warranty clause will not be applied:

- When the product is out of the warranty period;
- When the battery has been charged for more than 200 times;
- When the product doesn't use the official latest firmware;
- When the fault is caused when product is used for unlawful activities;
- When the product flight log has been changed or deleted without approval;
- When the serial number label and waterproof mark of the product are damaged or altered;
- When the product has appearance, decorative or structural (such as frame and non-operating component) defects;
- When the damage is caused because it is not installed, used and operated as instructed by the manual;
- When the product damage is caused because of the use of the self-programming or non-official software;
- When the damage is caused by the reliability and compatibility problems when the product is used with the component of a third party other than Autel;
- When the product suffers from abnormal use or environment, accident or improper handling, unauthorized change, abuse, or improper installation, maintenance or storage;
- When the product is damaged due to external factors, including but not limited to, natural disaster, fire, water, dirt, dust, battery leakage, fuse burn-out, theft or any improper use of power supply;
- When user fails to send the product within 7 natural days after contacting Autel for warranty service.

5.5 Customer service

This section includes the information on technical support, maintenance service, application for replacement and spare parts.

5.5.1 Technical support

If you have any problem or question about our product, please contact the customer support of Autel Robotic:

China
Tel: 0755-2690 8091
Website: www.autelrobotics.cn

North America/Europe
Tel: (844) 692-8835
Email: support@autelrobotics.com / support.eu@autelrobotics.com
Website: www.autelrobotics.com

5.5.2 Maintenance service

If you want to return your equipment for repair, please mail to support@autelrobotics.com or call the customer support of Autel Robotic: 0755-2690 8091.

You are advisable to provide the following information:

- Name
- Email
- Mailing address
- Phone number
- Product name
- Complete problem description and photo
- For warranty: provide the proof of purchase
- For non-warranty: provide the preferred payment mode

The customer support personnel of Autel Robotic will evaluate the problem and give a reply within 2 days.

Remark

- All contents of the product may be deleted during maintenance. You are advisable to create a backup copy for the product before delivering it for warranty service.

Chapter 6

Annex

6.1 Authentication information and restricted area

6.1.1 Authentication information

- **FCC Warning Message**

Any Changes or modifications not expressly approved by the party responsible for compliance could void the user's authority to operate the equipment.

This device complies with part 15 of the FCC Rules. Operation is subject to the following two conditions:

(1) This device may not cause harmful interference
(2) this device must accept any interference received, including interference that may cause undesired operation.

- **FCC Radiation Exposure Statement**

This equipment complies with FCC radiation exposure limits set forth for an uncontrolled environment. This equipment should be installed and operated with minimum distance 20cm between the radiator & your body. This transmitter must not be co-located or operating in conjunction with any other antenna or transmitter.

For EVO II RTK Series with model EF7, SAR tests are conducted using standard operating positions accepted by the FCC/ISEDC with the device. When used, please keep the distance with a minimum of 10mm from the body.

Note: This equipment has been tested and found to comply with the limits for a Class B digital device, pursuant to part 15 of the FCC Rules. These limits are designed to provide reasonable protection against harmful interference in a residential installation. This equipment generates uses and can radiate radio frequency energy and, if not installed and used in accordance with the instructions, may cause harmful interference to radio communications. However, there is no guarantee that interference will not occur in a particular installation. If this equipment does cause harmful interference to radio or television reception, which can be determined by turning the equipment off and on, the user is encouraged to try to correct the interference by one or more of the following measures:

—Reorient or relocate the receiving antenna.
—Increase the separation between the equipment and receiver.
—Connect the equipment into an outlet on a circuit different from that to which the receiver is connected.
—Consult the dealer or an experienced radio/TV technician for help.

- **ISEDC RSS Warning**

This device complies with ISEDC licence-exempt RSS standard (s). Operation is subject to the

following two conditions:

(1) this device may not cause interference,
(2) this device must accept any interference, including interference that may cause undesired operation of the device.

Le présent appareil est conforme aux CNR d'Industrie Canada applicables aux appareils radio exempts de licence.

L'exploitation est autorisée aux deux conditions suivantes:

(1) l'appareil ne doit pas produire de brouillage, et
(2) l'utilisateur de l'appareil doit accepter tout brouillage radioélectrique subi, même si le brouillage est susceptible d'en compromettre le fonctionnement.

- **ISEDC Radiation Exposure Statement**

This equipment complies with ISEDC RF radiation exposure limits set forth for an uncontrolled environment. This transmitter must not be co-located or operating in conjunction with any other antenna or transmitter. This equipment should be installed and operated with minimum distance 20cm between the radiator & your body.

For EVO II RTK Series with model EF7, SAR tests are conducted using standard operating positions accepted by the FCC/ISEDC with the device. When used, please keep the distance with a minimum of 10mm from the body.

Any changes or modifications not expressly approved by the party responsible for compliance could void the user's authority to operate the equipment.

6.1.2 Diagram of restricted area

EVO Ⅱ RTK series can automatically identify restricted areas and avoid these areas by default during flight. This function ensures that the aircraft complies with the legal flight area requirements.
Flight restrictions are only enforced in some countries with mandatory legal requirements, such as China. China is the only country that requires manufacturers to enforce flight restrictions.

Remark

- Operator shall abide by all the local rules and regulations concerning flight.

The restricted area is classified into two.

Class I: main airport & low-altitude area for manned aircraft

- Restricted area

A circular area centered on this area and with a radius of 2.4km (subject to government rules)

- Height limit area

An annular area centered on this area and with a radius of 2.4-8km. The flight height of the

aircraft is limited and such height limit varies with the radius. When the radius decreases from 8km to 2.4km, the maximum flight height will decrease from 120m to 10.5m.

- Warning area

APP will give a warning information when the aircraft enters the area of 8.1km from the airport.

Remark

- When the aircraft enters any **take-off restricted area**, it will land automatically. When the aircraft enters the **altitude restricted area**, its maximum allowable altitude will be lowered accordingly. Please pay special attention to the warning message displayed by **Autel Explorer™** App.

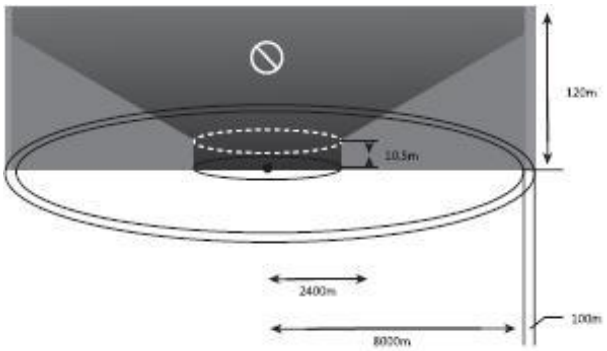

Class II: Sensitive area or organization & military area & border between countries

- Restricted area

A circular area centered on this area and with a radius of 1km

- Warning area

APP will give a warning information when the aircraft enters the area of 2km from the airport.

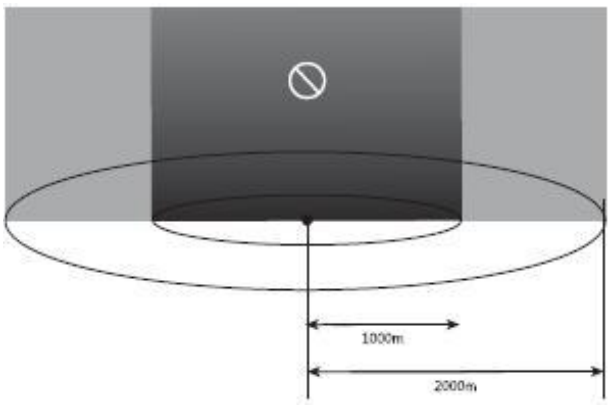

6.2 Specifications

Aircraft	
Weight (including propeller and battery)	1250g±0.5g(EVO II Dual 640T RTK) 1237g±0.5g(EVO II Pro RTK)
Wheel base	397mm
Max. flight time (wind-free environment)	36 minutes
Max. horizontal flight speed	72 km/h (positioning mode)
Max. takeoff speed	5 m/s (automatic flight) 8 m/s (manual manipulation)
Max. landing speed	4 m/s
Max. takeoff altitude	6000 m
Max. wind resistance	Grade 8
Working temperature scope (℃)	0-40℃
Working frequency	2.4-2.4835GHz
Transmission power	2.4-2.4835GHz FCC: ≤26 dBm ISED: ≤26 dBm CE: ≤20 dBm RCM: ≤20 dBm SRRC: ≤20 dBm
Hover precision	When RTK is started and RTK works normally: Vertical: ±0.1 m; Horizontal: ±0.1 m When RTK is not started: Vertical: ± 0.02 m (vision positioning works normally); ± 0.2 m (GPS works normally) Horizontal: ± 0.02 m (vision positioning works normally); ± 0.5m (GPS works normally)

GNSS	
Single frequency high sensitivity GNSS	GPS+BeiDou+Galileo (Asian regions) GPS+GLONASS+Galileo (other regions)
Multi-frequency multi-system high-precision RTK GNSS	Use frequency points: GPS: L1/L2; GLONASS: L1/L2; BeiDou: B1/B2; Galileo: E1/ E5
	First positioning time: < 50 s
	Positioning accuracy: Vertical 1.5 cm + 1 ppm(RMS); Horizontal 1 cm + 1 ppm(RMS) 1 ppm means that the error is increased by 1 mm for every 1 km that the aircraft moves.

Gimbal	
Mechanical range	Pitch: -135° to +45° Course: -100° to +100°
Controllable range	Pitch: -90° to +30° Course: -90° to +90°
Stability	3-axis stabilization
Max. control speed (Tilt)	300°/s
Angle vibration range (°)	±0.005°

EVO II Pro RTK visible light camera	
Image sensor	1" CMOS
Valid pixel	20 million
Field of view	82°
Lens	Equivalent focal length: 28.6 mm Aperture: f/2.8 - f/11 Focusing range: 1 m to infinity (with automatic focusing)
ISO range	Video: 100-6400 (automatic) Picture: 100-12800 (automatic)

Zoom	1-16 times (max. 3 times lossless zoom)
Picture taking mode	Single Continuous: 3/5 frames Automatic enclosure exposure (AEB): 3/5 enclosure frame (under 0.7EV offset) Timing: JPG: 2s/5s/7s/10s/20s/30s/60s DNG: 5s/7s/10s/20s/30s/60s Pure night shooting: Support (in 4K JPEG format) Long exposure: max. 8s HDR imaging: (in 4K JPEG format)
Photographic resolution	5472*3648 (3:2) 5472*3076 (16:9) 3840*2160 (16:9)
Video format	MP4 / MOV (MPEG-4 AVC/H.264, HEVC/H.265)
Video resolution	6K 5472*3076 p30/p25/p24 4K 3840*2160 p60/p50/p48/ p30/p25/p24 2.7K 2720*1528 p120/p60/p50/p48/p30/p25/p24 1080P 1920*1080 p120/p60/p50/p48/p30/p25/p24
Max. video bitrate	120Mbps

EVO II Dual 640T RTK thermal imaging camera	
Infrared thermal imaging sensor	Vanadium oxide uncooled infrared focal plane detector
Field of view	H33°V26°
Sensor resolution	640x512
Focal length	13mm
Wavelength scope	8-14μm
Precise temperature measuring distance	2-20 m
Zoom	1-16 times
Picture taking mode	Single; Continuous: 3, 5, 3 pieces by default; Timed shooting: 2S, 5S, 7S, 10S, 20S, 30S, 60S, 5S by default.

Photographic resolution	Infrared mode: 640*512 Picture-in-picture: 1920*1080, 1280*720
Picture format	TIFF+JPG (with irg file)
Video format	MP4 / MOV (support H.264/H.265)
Video resolution	640*512 30fps
Temperature measuring precision	±3℃ or ±3% of reading (which ever is larger) @ ambient temperature -20℃-60℃
Temperature measuring scope	High gain mode: -20° to +150° Low gain mode: 0° to +550°

EVO II 640T RTK visible light camera	
Image sensor	1/2" CMOS
Valid pixel	48 million
Field of view	79°
Lens	Equivalent focal length: 25.6 mm Aperture: f/1.8 Focusing range: 0.5m to infinity (with automatic focusing)
ISO range	Video: 100-6400 (automatic) Picture: 100-3200 (automatic)
Zoom	1-16 times (max. 4 times lossless zoom)
Picture taking mode	Single Continuous: 3/5 frames Automatic enclosure exposure (AEB): 3/5 enclosure frame (under 0.7EV offset) Timing: JPG: 2s/5s/7s/10s/20s/30s/60s DNG: 5s/7s/10s/20s/30s/60s Pure night shooting: Support (in 4K JPEG format) Long exposure: max. 8s HDR imaging: (in 4K JPEG format)
Photographic resolution	8000*6000 (4:3) 7680*4320 (16:9) 4000*3000 (4:3) 3840*2160 (16:9)
Video format	MP4 / MOV (MPEG-4 AVC/H.264, HEVC/H.265)

Video resolution	8K 7680*4320 p25/p24 6K 5760*3240 p30/p25/p24 4K 3840*2160 p60/p50/p48/ p30/p25/p24 2.7K 2720*1528 p120/p60/p50/p48/p30/p25/p24 1080P 1920*1080 p120/p60/p50/p48/p30/p25/p24
Max. video bitrate	120Mbps

Vision system	
Type of video system	Omnidirectional binocular vision system
Forward vision	Accurate measurement range: 0.5 - 20 m Detection range: 0.5 - 40 m Effective sensing speed:< 15m/s Field of view: horizontal: 60°, vertical: 80°
Backward vision	Accurate measurement range: 0.5 - 16 m Detection range: 0.5 - 32 m Effective sensing speed:< 12m/s Field of view: horizontal: 60°, vertical: 80°
Upward vision	Accurate measurement range: 0.5 - 12 m Detection range: 0.5 - 24 m Effective sensing speed:< 6m/s Field of view: horizontal: 65°, vertical: 50°
Downward vision	Accurate measurement range: 0.5 - 11 m Detection range: 0.5 - 22 m Effective sensing speed:< 6m/s Field of view: horizontal: 100°, vertical: 80°
Left and right vision	Accurate measurement range: 0.5 - 12 m Detection range: 0.5 - 24 m Effective sensing speed:< 10m/s Field of view: horizontal: 65°, vertical: 50°
Front effective use environment	The surface has rich textures under sufficient lighting conditions (>15 lux, normal indoor fluorescent lighting environment) Above: The surface is made of diffuse reflection material and the reflection rate is >20% (e.g. wall surfaces, trees, human, etc.) Below: The ground has rich textures under sufficient lighting conditions (>15 lux, normal indoor fluorescent lighting environment)

Remote controller and image transmission	
Max. desired signal distance	9km FCC, 5km CE ((no interference, no blockage)
Working frequency	2.4-2.4835GHz
Transmission power	2.4-2.4835GHz FCC: ≤26 dBm ISED: ≤26 dBm CE: ≤20 dBm RCM: ≤20 dBm SRRC: ≤20 dBm
Real-time image transmission quality	720p@30fps / 1080p@30fps
Max. real-time image transmission code rate	40Mbps
Remote controller battery	5000mAh
Working time	3 hours
Charging time	Quick charging of 2 hours
Display screen	3.26-inch OLED 854(W) * 480(H) pixel Directly pre-view the video without connecting to the cell phone
Operating current / Voltage	1.7A@3.7V

Aircraft aircraft battery	
Battery capacity(mAh)	7100mAh
Voltage (V)	11.55
Transmission power (2.4G)	13.2
Battery type	LiPo 3S
Battery energy	82Wh
Net weight (g)	365
Charging temperature range (℃)	5- 45℃

Storage temperature & humidity	-10-30℃, 65±20%RH
Recommended storage temperature	22-28℃
Max. charging power consumption (W)	1.7A@3.7V
Charging time	90 minutes

Charger	
Input	100-240 V, 50/60 Hz, 1.5A
Output	13.2 V ⎓ 5 A 5V⎓ 3A 9V⎓ 2A 12V⎓ 1.5A
Voltage (V)	13.2± 0.1 V
Rated power	66 W

Intelligent Aircraft Manager	
Operating ambient temperature	5℃ to 45℃
Voltage	13.2 V

Memory	
SC card memory	Standard: 32G Support max. 256G
Built-in memory	8G